Sebree Mining LLC
DNR Permit No. 917-9007, Am 2
LRL 2014-196

Mitigation Plan
October 2014

EcoSource, Inc. 104 Boston Square, Georgetown, Kentucky 40324 Telephone (502) 868-5200

EcoSource, Inc.
104 Boston Square
Georgetown, Kentucky 40324

Telephone (502) 868-5200
Fax (502) 868-5282

October 11, 2014

Mr. Mike Ricketts
Army Corps of Engineers
6855 State Road 66
Newburgh, Indiana 47630

RE: Sebree Mining LLC
DNR Permit No. 917-9007 Am 2
LRL 2014-196
Mitigation Plan

Dear Mike:

Enclosed is one (1) copy of the proposed mitigation plan for the above referenced project. If you have any questions please feel free to contact me at your convenience.

Sincerely,

Debbie Collinsworth
Principal Scientist

Enc.

Sebree Mining LLC
DNR Permit No. 917-9007, Am 2
LRL 2014-196

Mitigation Plan
October 2014

Submitted to:

Louisville District
Army Corps of Engineers,
Newburgh Field Office

EcoSource, Inc.
104 Boston Square, Georgetown, Kentucky 40324 Telephone (502) 868-5200

TABLE OF CONTENTS

I. BASELINE INFORMATION 1
A. Site Location 1
B. USGS 8 Digit Watershed 1
C. Surrounding Land Use 1
D. Classification 1
E. Landscape Conditions 2
F. Field Observations 3
G. Climate 3
H. Water Quality 3
I. Functional Assessment Tool 3
J. Maps 4
K. Responsible Parties 4

II. GOALS AND OBJECTIVES 5
A. Function and Values, Functional Losses vs Gains, Functional Replacement 5
B. Identification of Potential Challenges 5
C. Environmental Goals and Objectives 5

III. MITIGATION WORK/IMPLEMENTATION 6
A. Site Preparation 6
B. As-Built Conditions 9
C. Financial Assurances 9

IV. SUCCESS CRITERIA 10
A. Minimum Success Criteria 10

V. MONITORING 11
A. Monitoring Reports 11
B. Release from Monitoring 11

VI. CONTINGENCY PLAN 12

MAPS AND FIGURES
- General Location Map
- Mitigation Area – Baseline Conditions
- Mitigation Area – Proposed Conditions
- BMP Silt Control Details

SEBREE SOUTH—PRELIMINARY MITIGATION SITE ASSESSMENT, July 2014

BASIS FOR OUT-OF-KIND MITIGATION FOR PROJECT IMPACTS, August 2014/Revised September 2014

I. BASELINE INFORMATION

The purpose of the project is to place fill material within streams and wetlands in order to increase the existing permit area to include facilities for additional refusal disposal, topsoil storage, mine management area, sediment control, and roads.

The intent of the proposed mitigation is to adequately and appropriately replace the lost function from construction associated with the proposed mining operation. The chosen mitigation site is a farmed field within the same 8-digit HUC as the impacts.

A. Site Location

The impact area, permitted as DNR 917-9007 Am 2, is located in Webster County, Kentucky. To access the impact area, from the intersection of US 41 and KY 370 in Sebree, turn south onto KY 370S and travel for a distance of 2.7 miles. The destination is located along the right (south) side of KY 370, and is the northern edge of the proposed amendment area, which is currently a row-cropped field.

The compensatory mitigation area is located off-site, but also in Webster County. To access the mitigation area, from the intersection of US 41 and KY 56 in Sebree, turn south onto US 41 and travel for a distance of 2.5 miles. Turn right (west) onto KY 494 and travel for a distance of 1.8 miles. The destination is the farmed field located on the left (east) side of Bailey Ditch, and located on the right (north) side of KY 494. The coordinates for the site are latitude 37.577664° and longitude -87.549462°.

B. USGS 8-digit Watershed

The impact and mitigation sites are located within the Lower Green River 8-digit HUC area (05110005).

C. Surrounding Land Use

1. ***Impact Area*** – The proposed project area consists of upland cropland, forested slopes and bottomlands, and intermittent streams. The cropland is planted annually with row crops. During field reconnaissance, large scale changes due to historic drainage improvements in the upland fields were noted. These changes included installation of tiles in the crop fields, deepening through excavation (possibly with draglines) the receiving streams located south of the fields, routing of drainage tiles into these streams, development of ridges from disposal of excavated soils, and deepening and widening of more downstream channels through incision from increased discharge and velocity of flow. Adjacent land uses include additional forested area and row-cropped fields.

2. ***Mitigation Area*** – The land use within the mitigation area includes a row-cropped field. Part of the field has been placed into the Conservation Reserve Program (CRP). A very narrow band of trees lines Bailey Ditch. Adjacent to the mitigation area are also row-cropped fields.

D. Classification

1. ***Impacted Streams/Wetlands*** – The streams that will be impacted were field delineated and assessed based upon the Rosgen stream classification, Strahler order system, and the flow regime. Wetland delineations were performed using the criteria set forth in the 1987 manual[1], with

[1] Army Corps of Engineers Wetlands Delineation Manual, Technical Report Y-87-1. 1987. Environmental Laboratory, U.S. Army Engineer Waterways Experiment Station, Vicksburg, MS.

priority set to the April 2012 manual addendum for the region[2]. The following tables summarize the results of this field reconnaissance.

Section 404 Regulated Wetlands to be *Impacted*			
Wetland ID	**Area (acres)**	**NWI Classification***	**1979 Cowardin Classification***
3	0.194	Not classified	PFO
TOTAL	0.194		

* "Classification of Wetlands and Deepwater Habitats of the United States," US Fish and Wildlife Service, FWS/OBS-79/31, December 1979.

Section 404 Regulated Streams to be *Impacted*.					
Stream Reach	**Stream Length (linear feet)**	**Stream Type***	**Stream Order****	**Flow Regime**	**Habitat Score**
9	335	G	1st, 2nd	Intermittent	109
10	355	C, G	1st	Intermittent	109
11	360	C, G	1st	Intermittent	109
12	805	A, C, G	1st, 2nd ,3rd	Intermittent	113
13	240	C, G	1st	Intermittent	109
26	75	G	1st	Intermittent	64
Total Intermittent	2,170				

* As defined by Dave Rosgen (Applied River Morphology. Wildland Hydrology, 1996) using a Level 1 characterization.
** Generated from the actual aerial mapping and not from the 1:24,000 scale USGS mapping.

2. ***Proposed Mitigation*** – Out-of-kind mitigation is proposed as compensation for project impacts. The following table summarizes the characteristics of the proposed mitigation area. Reference the figure titled "Mitigation Area-Proposed Conditions" for an illustration of these mitigation types.

Mitigation Area		
Mitigation Type	**Area (acres)**	**Proposed NWI Classification***
Wetland Restoration	7.0	Palustrine forested
Wetland Enhancement	1.3	Palustrine forested
Riparian Restoration	0.9	Upland forested (due to a lack of presence of hydric soils)
TOTAL	9.2	

* "Classification of Wetlands and Deepwater Habitats of the United States," US Fish and Wildlife Service, FWS/OBS-79/31, December 1979.

E. Landscape Conditions

1. ***Impacted Streams/Wetlands*** – The majority of the streams and the single wetland to be impacted lie within a forested area. The riparian cover is comprised of mature woody vegetation. Stream reach 26 is located within a farmed area. All of the streams are headwater in position, and have an intermittent flow regime. Further information concerning the delineation of these streams and wetland is contained in the document entitled "Jurisdictional Streams and Wetland Determinations"[3].

[2] Army Corps of Engineers. April 2012. Regional Supplement to the Corps of Engineers Wetland Delineation Manual: Eastern Mountains and Piedmont Region (ver. 2.0).
[3] EcoSource, Inc. March 2014 (Revised April/May 2014) . "Sebree Mining LLC DNR Permit No. 917-9007 Am 2, Jurisdictional Streams and Wetlands Determinations."

2. ***Proposed Mitigation*** – The proposed mitigation site is a farmed field, including CRP areas, and is bordered along one side by Bailey Ditch, a perennial stream. The site is further detailed in the previously submitted document entitled "Preliminary Mitigation Site Assessment."[4]

F. Field Observations

1. ***Impacted Streams –*** The streams were delineated based upon best professional judgement and presence of bed and bank features. The data sheets from the EPA Rapid Bioassessment Protocol were used during the assessment. The data sheets and map were previously submitted under separate cover entitled "Jurisdictional Streams and Wetland Delineations."

2. ***Proposed Mitigation –*** The site is located within the Belknap and McGary soil series. As referenced in the map included in the "Preliminary Mitigation Site Assessment," the entire owned tract was reviewed for the presence of hydric soils. The sampling site closest to Bailey Ditch did not meet the hydric soils criteria, nor did the sampling site that was along the east boundary of the tract and farthest away from Bailey Ditch. The portion of the tract chosen for mitigation includes the area abutting Bailey Ditch and additional area of hydric soils to support the proposed mitigation of forested wetland.

G. Climate

The climatic information for the general area of the impacts and the mitigation, is provided in the Union and Webster Counties Soil Survey.[5] The annual precipitation averages 43.8 inches, 50% usually falls in April through September. This rainy period also corresponds loosely to the growing season. Average seasonal snowfall is 14 inches. The average relative humidity in the midafternoon is about 60%, with an increase in the evening and an average of 80% at dawn. Sunlight occurs 75% of the time possible in the summer and 45% in the winter. Prevailing wind is from the south-southwest, with the highest wind speed occurring in March.

H. Water Quality

The water quality was not quantified or qualified within the area of impact nor the mitigation. However, both the impacted streams and the mitigation site receive agricultural runoff. A higher sediment load and elevated specific conductivity would be the typical end result of this type of runoff. As such, the proposed mitigation will help to ameliorate this response by providing a wider riparian zone that will serve as a filter strip between Bailey Ditch and the row crop fields. This riparian zone will work to provide some level of benefit from the filtering of nutrients. Also, the conversion of the farmed field to wetlands will further decrease nutrient loading due to the removal of cropped fields.

I. Functional Assessment Tool

1. ***Impacted Streams/Wetlands*** – For the streams, a summary of stream lengths has been generated along with the habitat value from the EPA RBP Habitat Data Sheets. For the wetland, an assessment tool has not been applied to or chosen for the impact.

2. ***Proposed Mitigation*** – Reconnaissance of the mitigation site was performed to field verify the soils as mapped by the soil survey. The reason for this reconnaissance was to allow an accurate determination of where hydric soils occur in the mitigation area, and to assess the potential

[4] EcoSource, Inc. July 2014. "Sebree Mining LLC DNR Permit No. 917-9007 Am 2; LRL 2014-196, Preliminary Mitigation Site Assessment."
[5] USDA, Soil Conservation Service. January 1981. Soil Survey of Union and Webster Counties, Kentucky.

benefit to Bailey Ditch from restoration of a riparian zone. No assessment tool has been applied to or chosen for the mitigation site.

J. Maps

The following mapping and figures illustrating the features discussed in this document are included in the Appendix.

- General Location Map
- Mitigation Area – Baseline Conditions
- Mitigation Area – Proposed Conditions
- BMP Silt Control Details

K. Responsible Parties

Applicant: Sebree Mining LLC
771 Corporate Drive, Suite 1000
Lexington, KY 40503
Contact: Robert Ray (859-685-6332)

Consultant: EcoSource, Inc.
104 Boston Square
Georgetown, KY 40324
Contact: Debbie Collinsworth (502-868-5200)

Ownership of Mine Site
Sebree Mining LLC
771 Corporate Drive, Suite 1000
Lexington, KY 40503

Ownership of Mitigation Site:
ARP Sebree South LLC
771 Corporate Drive, Suite 1000
Lexington, KY 40503

II. GOALS AND OBJECTIVES

A. Function and Values, Functional Losses vs Gains, Functional Replacement

A comprehensive discussion of functions and values, functional losses vs gains, and functional replacement is provided in the document entitled "Basis for Out-of-Kind Mitigation for Project Impacts." This document is provided in the appendix.

B. Identification of Potential Challenges

The mitigation site is currently used for farming of row crops. Along the northern boundary are small CRP areas. As such, no true challenges are considered to be present at this site. In the event some component of the proposed mitigation plan fails, remediation of the failure will consist of either repairing the problem situation or the substitution of an alternate mitigation site. However at this time, no overt remedial efforts are expected.

C. Environmental Goals and Objectives

The overall goal and objective of the restoration is to provide adequate and appropriate mitigation for the losses caused by the impacts from construction. Final success of the wetlands will be determined by the presence of the three criteria used to define a jurisdictional wetland. Those criteria include hydric soils, hydrophytic vegetation, and appropriate hydrology. The mitigation site was selected due to its proximity to the proposed impacts, presence of a restorable resource, availability of restrictive covenants or easements, and the need for watershed improvements in the 8-digit watershed.

III. MITIGATION WORK/IMPLEMENTATION

A. Site Preparation

1. Plans.

a. Grading

Grading will be limited to the possible decommissioning of any drainage tiles, and the excavation necessary for placement of the groundwater dams. During construction of the groundwater dam parallel to Bailey Ditch, any drainage tiles present will be severed and removed. The tiles will be excavated as far as necessary for complete removal. The groundwater dams will be constructed to the appropriate depth necessary to intercept the water table and to maximize groundwater retention on the mitigation area.

A chisel plow or like equipment will be used to rip the soil throughout the farmed field. An adequate amount of decompaction will be necessary to promote healthy tree growth. The chisel plowing is expected to result in a slight ridge/valley microtopography that will enhance wildlife habitat and promote the development of small depressions. Dead trees will be taken from the mine construction area and transported to the mitigation area for placement. The dead trees are to be randomly placed throughout the wetland restoration area for enhanced wildlife habitat and bird perches.

b. Hydrologic Changes

No overt changes to the hydrology will be required. However, in order to retain groundwater on the mitigation site, groundwater dams will be installed to increase retention time. In addition, the removal of any possible drainage tiles will also prevent dewatering of the mitigation site. Any existing perimeter drainage ditches will not be removed nor modified.

c. Water Control Structures

No surface water control structures are proposed.

d. Exotic Vegetation Control

At this time, the mitigation area is used for row crops, with a minimal amount of established CRP area. A narrow band of trees/shrubs exists along the edge of Bailey Ditch. No excessive amounts of exotic vegetation were noted during field reconnaissance. However, if exotic vegetation becomes a nuisance on the site, adequate and appropriate measures will be undertaken for removal or control.

e. Erosion Control

As necessary, best management practices including the use of straw bales or silt fences will be implemented. All measures will be undertaken to prevent construction soil from leaving the site.

f. Bank Stabilization

No construction will be performed related to Bailey Ditch. The only work to be performed related to this stream, is the planting of trees in the riparian zone.

g. Equipment and Procedures to be Used

Since no large-scale grading is necessary, the appropriate size excavator will be used for construction of the groundwater dams. Likely, a tractor mounted chisel plow will be used for ripping. A small vehicle mounted (ATV or tractor) auger will be used for tree planting. All necessary safeguards will be implemented to insure the mitigation site does not become compacted from equipment passage.

h. Site Access Control

During restoration activities, vehicular access will be allowed only from the adjacent highway. Since the mitigation area is located adjacent to a public road, foot access will be possible during and after restoration activities have ceased. No plans exist to fence the area in order to further limit access. No problems are anticipated from trespassers causing damage to the project area. In the event problems do arise, appropriate actions will be taken to protect the mitigation area.

i. Strategy for Minimizing Soil Compaction

During any construction activity, only the appropriately sized equipment will be used. In addition, the entire site will be ripped to eliminate compaction in the tree planting areas. All other vehicular traffic will be severely limited or excluded on the mitigation area.

2. Soil/Substrate

No changes will be made to the existing soil on the mitigation site. The hydric characteristics of the soil have been proven, and no modifications are necessary.

3. Hydrology

In order to prove hydrologic connectivity, groundwater wells are proposed to be installed. The exact locations of these wells have not been determined at this time, but installation will be performed per the guidance provided in published Corps guidance.[6] Groundwater wells will be installed within the mitigation area and on the unused portions of the tract.

4. Planting Plan

The mitigation site is to be planted as a palustrine forested wetland. None of the existing trees within the riparian zone along Bailey Ditch will be removed. The entire area shown on the figure titled “Mitigation Area – Proposed Conditions” will be planted in woody species. The planting list was developed based upon species expected to be found in the proposed wetland habitat. Although the riparian area along Bailey Ditch is not considered to be wetland restoration, the same species will be planted within this area.

The use of Root Prune Method (RPM) trees is proposed. The availability of species was taken from the inventory list provided by Forrest Keeling Nursery. Another provider can be used, but this nursery does have the required stock available. The following table provides a list of species to be planted, with a concentration on hard mast species. Regardless of the composition, at least eight species are to be planted. No more than six of these species are to be oaks. No less than 125

[6] Technical Standard for Water-Table Monitoring of Wetland Sites. ERDC TN-WRAP-05-2 June 2005. U.S. Army Corps of Engineers.

trees per acre are to be planted of RPM stock. Trees are to be planted in a randomized pattern and not in rows. Tree placement starts at the top of bank along Bailey Ditch and extends into the farmed field, including the CRP areas. All attempts will be made to plant the trees on natural mounds left behind from the ripping process, in order to prevent over saturation or standing water around the planted stock.

Scientific Name	Common Name	Hydrophytic Classification	Pot Size
Carya illinoensis	Pecan	FACU	3 gallon
Carya laciniosa	Shellbark	FAC	3 gallon
Quercus bicolor	Swamp white oak	FACW	3 gallon
Quercus imbricaria	Shingle oak	FAC	3 gallon
Quercus lyrata	Overcup oak	OBL	3 gallon
Quercus macrocarpa	Burr oak	FAC	3 gallon
Quercus michauxii	Swamp chestnut oak	FACW	3 gallon
Quercus palustris	Pin oak	FACW	3 gallon
Quercus pagodifolia	Cherrybark oak	FACW	3 gallon
Quercus shumardii	Shumard oak	FAC	3 gallon

In order to prevent competition from the herbaceous species with the woody species, a seeding mix is not being required. However, in the event the need arises for some kind of vegetative cover, the following seed mix is an example of a preferred mix for any bare areas. Another seeding mix can be substituted as necessary. However, the mix should include at least 50% native species by composition.

Scientific Name	Common Name	#'s / Acre
Andropogon gerardii	Big bluestem	3
Glyceria striata	Fowl manna grass	2
Elmyus hystix (Hystrix patula)	Bottle brush grass	2
Panicum virgatum	Switchgrass	2
Lolium multiflorum	Annual rye	4

The tree and ground cover species were chosen based upon their ability to grow and flourish in the planted area. The planting of the trees will occur as soon as climatic conditions allow, but when the growing period is appropriate. Uncontrollable climatic conditions such as extreme amounts of precipitation or drought can cause tree planting to be delayed until soil conditions are more suitable. Only the hard mast species within the newly planted area will be used to determine overall success. The trees that remain within the existing riparian area along Bailey Ditch will not be used to determine tree success.

5. *Exotic and Undesirable Species Control*

No exotic species control plan is being proposed. In the event control measures become necessary. The Corps will be contacted for approval of the control plan.

6. *Schedule*

Any necessary grading will be completed prior to tree planting. Tree planting is anticipated for the first appropriate growing season after completion of construction. Usually, tree planting is

performed in mid-Spring or late Fall. After the initial growing season has passed, the first monitoring report can be submitted.

7. Construction Monitoring

Monitoring of the grading activities will be provided on a daily basis. Also during tree planting, a planting supervisor will be present. The construction monitor will have the appropriate knowledge of the mitigation plan and any other elements that are needed to understand how to achieve the desired end product.

B. As-Built Conditions

Once one growing season has passed, an initial status report will be submitted. This report will include an assessment of the site construction, planting list, description of site conditions, any information on additional efforts required to achieve success, photographs, and an as-built drawing of the restoration area. The perimeter of the mitigation sites will be adequately marked with permanent signs.

C. Financial Assurances

The applicant takes full responsibility for the continued maintenance of the mitigation site. The company has an annual budget for remedial work at any of their restoration sites, and these sites would fall within that budget.

IV. SUCCESS CRITERIA

A. Wetlands Minimum Success Criteria

1. Wetland Delineation

A delineation of the wetland mitigation area will be performed during the final year of monitoring, in order to determine whether or not the site can be deemed jurisdictional. The guidelines as set forth in the 1987 delineation manual and the April 2012 regional supplement will be used as the standard. If the site meets the criteria of a jurisdictional wetland, then the site is considered to be a success.

2. Vegetation Structure and Complexity

The planting list provided in III.A.4 will assure adequate variety exists in the planted areas. The success standard for woody species will be 75 trees per acre of RPM stock only. Of the 75 TPA, 50 trees will be at least 3" diameter at breast height (DBH) and 15' in height. No single species will comprise more than 20% of the counted stems. Any volunteer woody stems will not be counted to determine success. The trees in the existing riparian zone will not be used to determine success, nor will the species composition be used to negate success. In addition, the projected Cowardin classification will be evaluated. If the site meets the criteria set forth herein, then the site is considered to be a success.

3. Hydrology

The site will meet the Cowardin classification of "temporarily flooded or saturated." The duration of flooding or saturation will occur for ≥5% of the growing season. Data collected from the sampling wells will be used to support this claim. If the site meets the criteria set forth herein, then the site is considered to be a success.

V. MONITORING

A. Monitoring Reports

1. Timing

Monitoring reports will be submitted on an annual basis. The first report will be due after one full growing season has been completed. Each report will be due in the Corp's office by January 30th of each year. Although RPM tree stock is to be used, no less than five years of monitoring are proposed. On-site inspections of the mitigation sites will be daily during construction, and no less than monthly for the first year following construction. During the monitoring period, biannual inspections will be performed during the first and last months of the growing season.

2. On-Site Method

Photo stations will be established in the first monitoring report. These photo locations will be repeated for each subsequent monitoring report in order to provide repeatable documentation of the mitigation site. These photo stations will be set forth on a map that will be submitted with each report. Each point of evaluation will be located on the same site map as the photos.

3. Documentation

A written narrative will be included that discusses the progression of the sites toward meeting the success goals. Also included will be a discussion of any modifications or remediation that was performed during the year represented by the report. The report will be broken down into the categories listed in Section IV. Success Criteria.

4. Responsible Parties

Sebree Mining LLC, as the applicant and project owner, will retain full responsibility for assuring project completion and success. Within the monitoring report, contact information for all participants will be identified by name, address, and phone number.

B. Release from Monitoring

A final monitoring report will provide a summary of the project, how success goals have been met, a comparison of the baseline to the final product, and a jurisdictional delineation. This submission will be followed by a coordinated field visit to the mitigation site to be attended by the involved agencies and the applicant.

VI. CONTINGENCY PLAN

In the event success criteria cannot be met in a given year, remedial measures will be presented to the Corps outlining a course of action. Included in this outline will be an analysis of the cause of failure. In the unlikely event that the mitigation site is deemed a failure, the applicant reserves the right to offer an alternative mitigation site or enter into discussions with the Corps to determine a strategy for providing mitigation for the non-compensated impact.

MAPS & FIGURES

- **General Location Map**
- **Mitigation Area - Baseline Conditions**
- **Mitigation Area - Proposed Conditions**
- **BMP Silt Control Details**

EcoSource, Inc.

Environmental Consulting

FIGURE: General Location Map	
DNR PERMIT NO.: 917-9007 Am 2	*APPLICANT:* Sebree Mining LLC
COE ID NO.: LRL 2014-196	*Scale:* not to scale

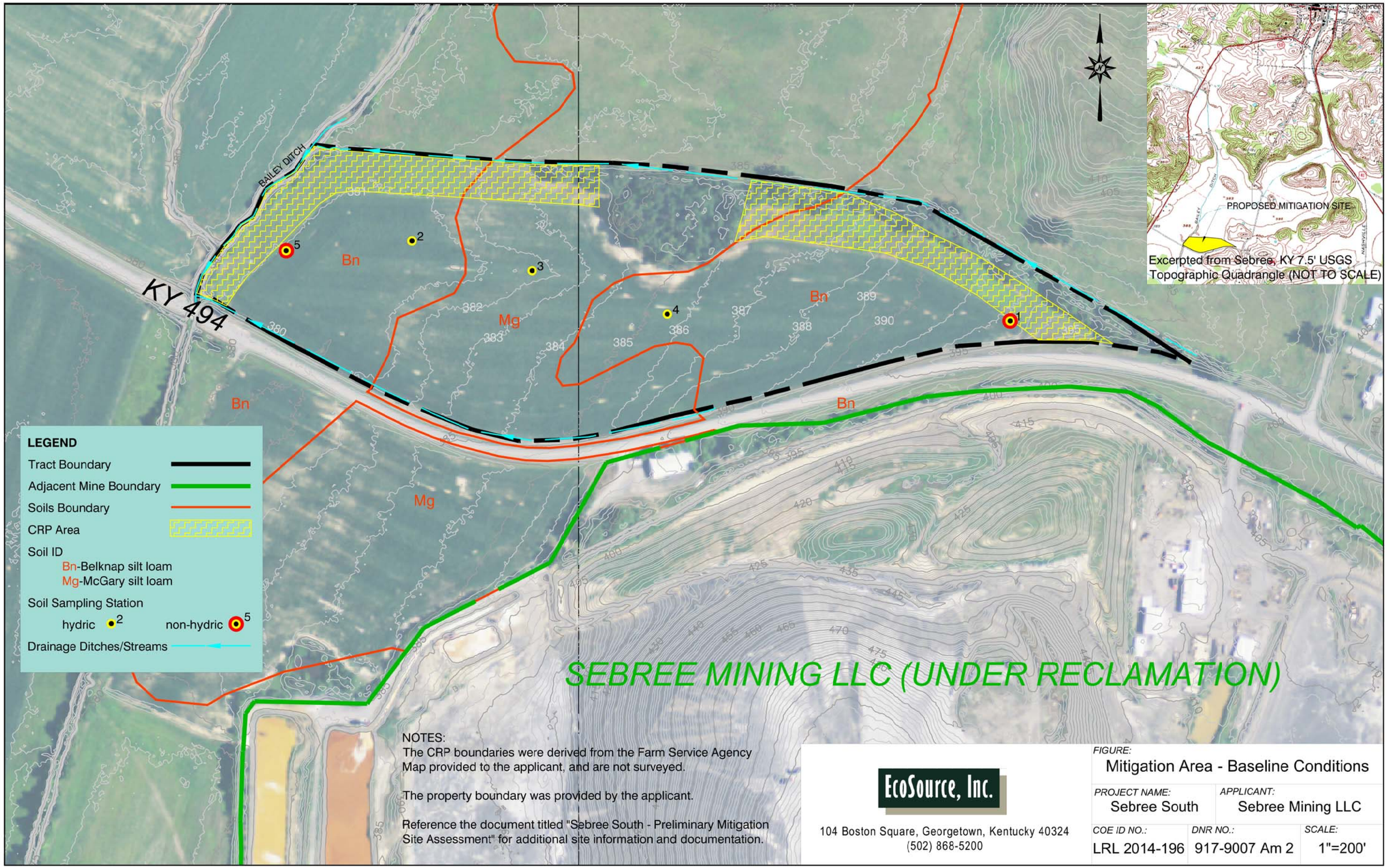

NOTES:
The CRP boundaries were derived from the Farm Service Agency Map provided to the applicant, and are not surveyed.

The property boundary was provided by the applicant.

Reference the document titled "Sebree South - Preliminary Mitigation Site Assessment" for additional site information and documentation.

EcoSource, Inc.

104 Boston Square, Georgetown, Kentucky 40324
(502) 868-5200

FIGURE:		
Mitigation Area - Baseline Conditions		
PROJECT NAME: Sebree South	APPLICANT: Sebree Mining LLC	
COE ID NO.: LRL 2014-196	DNR NO.: 917-9007 Am 2	SCALE: 1"=200'

Groundwater dam paralleling the northern edge of the field is to be excavated and recompacted to intercept the bottom elevation of the adjacent ditch.

No ripping is to occur within the Riparian Restoration or Wetland Enhancement areas, only tree planting.

No changes are to be made to this existing ditch.

Groundwater dam paralleling Bailey Ditch is to be excavated and recompacted to below the bottom elevation of Bailey Ditch in order to intercept the water table.

BAILEY DITCH

KY 494

THIS UNUSED PORTION OF THE TRACT IS RESERVED FOR LATER USE AS MITIGATION BY SEBREE MINING LLC

Groundwater dam paralleling KY 494 is to be excavated and recompacted to intercept the bottom elevation of the adjacent ditch.

LEGEND

- Tract Boundary
- Adjacent Mine Boundary
- Mitigation Area Boundary
- Wetland Restoration Area
- Wetland Enhancement Area
- Riparian Restoration Area
- Subsurface Groundwater Dam
- Drainage Ditches/Streams

No changes are to be made to this existing ditch.

Typical Wetland Restoration Area Microtopography
Not to Scale

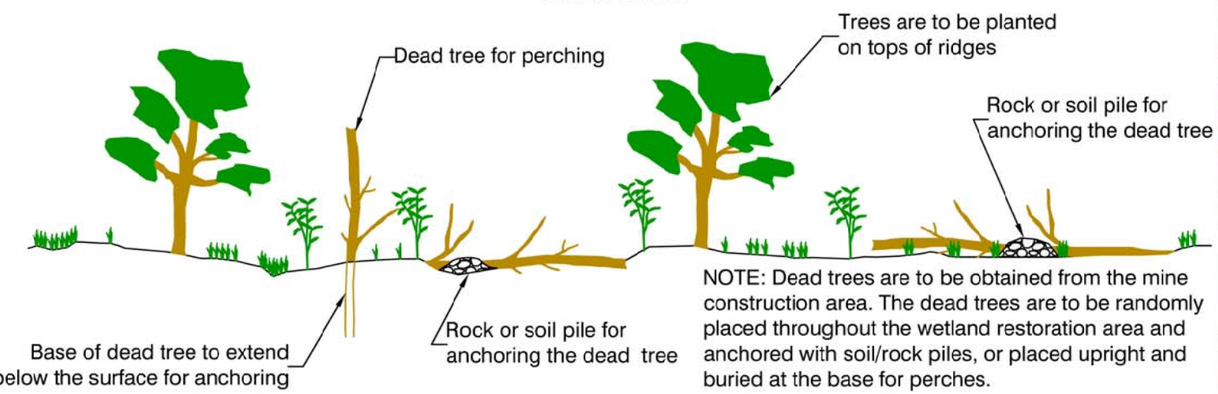

NOTE: Dead trees are to be obtained from the mine construction area. The dead trees are to be randomly placed throughout the wetland restoration area and anchored with soil/rock piles, or placed upright and buried at the base for perches.

NOTES:
The CRP boundaries were derived from the Farm Service Agency Map provided to the applicant, and are not surveyed.

The property boundary was provided by the applicant.

EcoSource, Inc.

104 Boston Square, Georgetown, Kentucky 40324
(502) 868-5200

FIGURE:
Mitigation Area - Proposed Conditions

PROJECT NAME:	APPLICANT:	
Sebree South	Sebree Mining LLC	
COE ID NO.:	DNR NO.:	SCALE:
LRL 2014-196	917-9007 Am 2	1"=200'

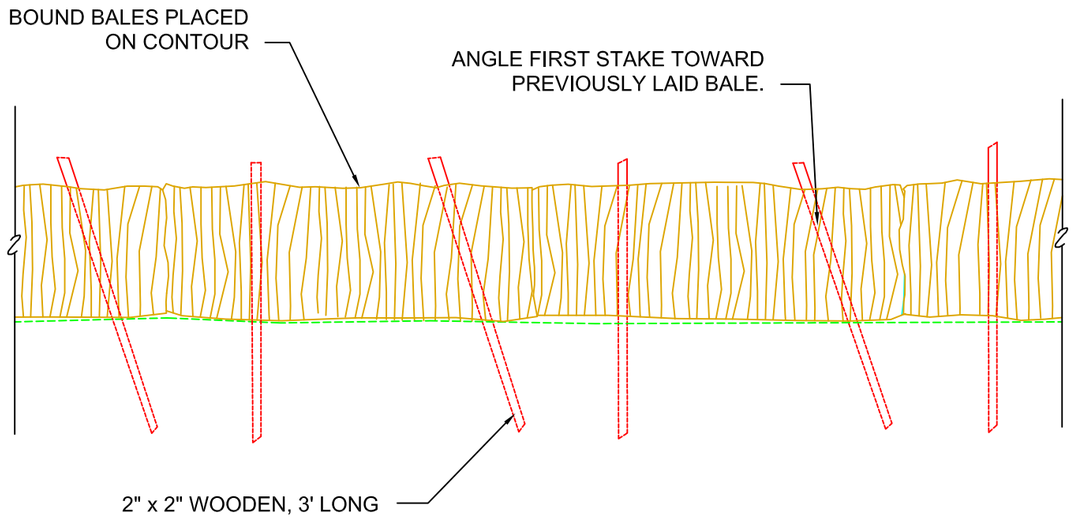

FRONT VIEW
STRAW BALE SILT CONTROL

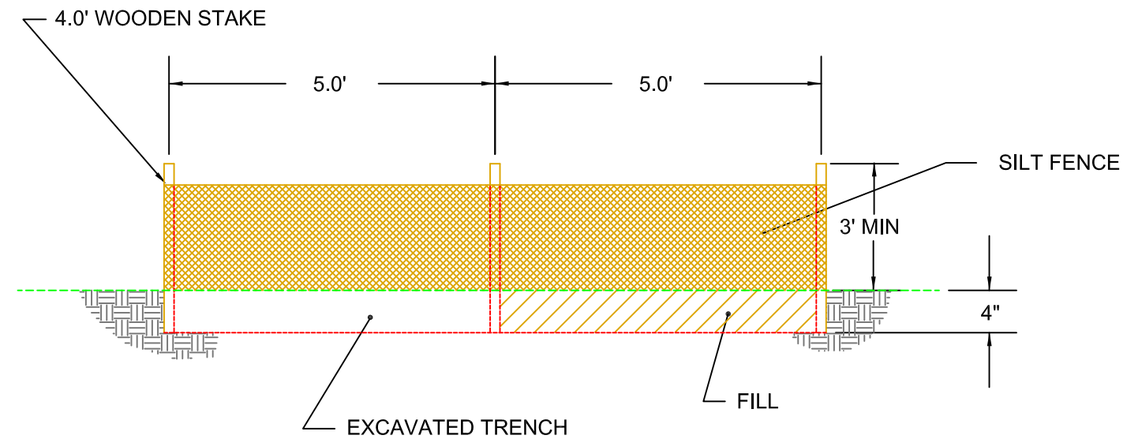

PROFILE
SILT FENCE

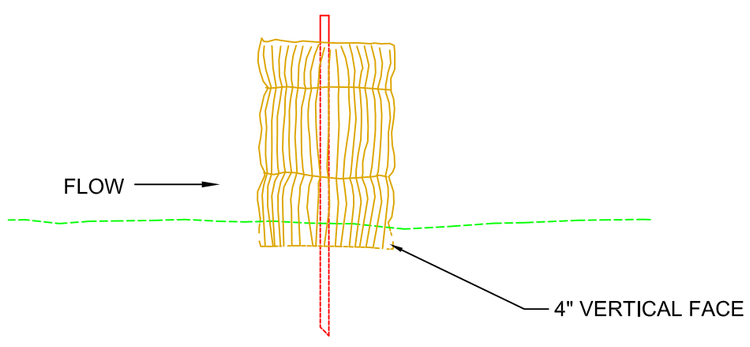

CROSS-SECTION
STRAW BALE SILT CONTROL

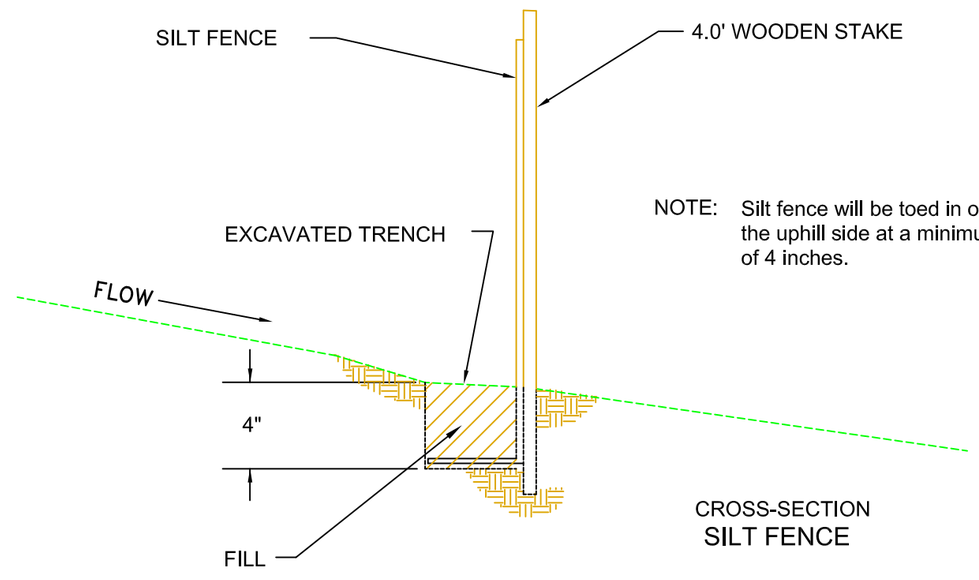

NOTE: Silt fence will be toed in on the uphill side at a minimum of 4 inches.

CROSS-SECTION
SILT FENCE

EcoSource, Inc.
104 Boston Square, Georgetown, Kentucky 40324
(502) 868-5200

FIGURE:		
BMP Silt Control Details		
PROJECT NAME: Sebree South	APPLICANT: Sebree Mining LLC	
COE ID NO.: LRL 2014-196	DNR NO.: 917-9007 Am 2	SCALE: not to scale

SEBREE SOUTH—PRELIMINARY MITIGATION SITE ASSESSMENT

July 2014

Sebree Mining LLC
DNR Permit No. 917-9007, Am 2
LRL 2014-196

Sebree South – Preliminary Mitigation Site Assessment

July 2014

Submitted to:

Louisville District
Army Corps of Engineers,
Newburgh Field Office

EcoSource, Inc.
104 Boston Square, Georgetown, Kentucky 40324 Telephone (502) 868-5200

SITE LOCATION

Sebree Mining LLC is proposing to use a tract of agricultural land in Webster County, Kentucky as mitigation for DNR 917-9007 Am 2, LRL 2014-196. Currently, the majority of the tract is planted in corn and the northern perimeter is enrolled in the Conservation Reserve Program (CRP). The specific location of the site is along KY 494, approximately 1.7 miles west of the intersection with U.S. 41, south of Sebree, Kentucky. In the future, this tract of land is planned to be incorporated into a much larger mitigation site located just south and across KY 494. Photos of the site are provided below. A site map is provided.

Photo Station 1 – facing west
(toward Bailey Ditch)

Photo Station 1 – facing east

SITE RECONNAISSANCE

On July 10, 2014, site reconnaissance was performed in order to document soil characteristics and to Determine if any impediments were present that would preclude using the site for mitigation. Five soil sampling stations were established and placed to represent the two soil types mapped on the site. Within the Belknap soils, four soil sampling stations were established and within the McGary soils, one station was established. Within each sampled profile, a plow zone was documented to be generally 9” in depth from the surface. The following table provides a summary of each soil sampling station.

Soil Sampling Station	Soil Profile		Representative Photo
1	0”-2”	10 YR 4/3, silt loam	
	2”-10”	10 YR 4/4, silt loam	
	10”-16”	10 YR 4/4, silt loam • mottles: 10 YR 6/6, 10%	
2	0”-4”	10 YR 4/2, silt loam • mottles: 10 YR 6/6, 2%	
	4”-8”	10 YR 4/3, silt loam	
	8”-16”	10 YR 5/2, silt loam • mottles: 10YR 6/1, 5%, 2.5 YR 4/8, 5%	
3	0”-6”	10 YR 4/3, silt loam	
	6”-8”	10 YR 5/2, silt loam • mottles: 10YR 5/8, 3%, 7.5 yr 6/1, 3%	
	8”-16”	10 YR 6/1, silt clay loam • mottles: 10 YR 5/8, 40%	

Soil Sampling Station	Soil Profile		Representative Photo
4	0”-9”	10 YR 4/3, silt loam	
	9”-16”	10 YR 6/1, silt loam • mottles: 10 YR 5/8, 40%	
5	0”-12”	10 YR 4/4, silt loam	
	12”16”	10 YR 4/4, silt loam • mottles: 5 YR 5/8, 3%	

Based upon the results from the field reconnaissance, soil sampling stations 2, 3, and 4 illustrate hydric characteristics. The plow zone ranged from a depth of 8” to 9”. Soil sampling station 1, located along the eastern edge of the project boundary *did not* exhibit hydric characteristics. Soil sampling station 5, located just east of Bailey Ditch, also *did not* exhibit hydric characteristics. Likely, the zone of influence from the deeply-incised Bailey Ditch has a significant effect on the hydric features at this location.

Also noted during the site reconnaissance was the presence of ditches to aid in dewatering the soils. Minor ditches travel east to west along the northern and southern boundaries of the property. Both are shallow, but effective in draining the soils. Bailey Ditch is the receiving stream for both of these ditches. Bailey Ditch is deeply incised (+10’ from top of bank) and apparently has a far reaching zone of influence. Soil sampling station 5 is located 125’ away from Bailey Ditch, as measured perpendicular to the stream. Again, this station exhibited no hydric characteristics. Soil sampling station 2 is located 325’ away from Bailey Ditch. This station does exhibit hydric characteristics.

PROPOSED PRELIMINARY MITIGATION PLAN

The preliminary mitigation plan would be to rework the drainage network around the mitigation site in order to retain more soil moisture. Since the two minor east to west flowing ditches also drain the highway or the adjacent crop field, those ditches cannot be removed. Therefore, subsurface, groundwater dams are proposed to aid in improving site hydrology. These dams can be just off the edge of the east to west flowing ditches, and within 50’ of Bailey Ditch. The groundwater dams would intersect and increase soil moisture/saturation during the growing season. The site would be planted in Root Prune Method (RPM) trees at an appropriate rate. Groundwater wells would be installed throughout the site. The groundwater wells would provide essential information regarding extent of hydrologic influence on the drier, eastern portion of the site. Any unused mitigation credit would be available for future disturbances by the applicant (or subsidiary companies).

BASIS FOR OUT-OF-KIND MITIGATION FOR PROJECT IMPACTS

Submitted August 2014; Revised September 2014

SEBREE MINING LLC
DNR 917-9007 Am 2
LRL 2014-196
Basis for Out-of-Kind Mitigation for Project Impacts

Submitted August 2014; Revised September 2014

Submitted to:

Louisville District
Army Corps of Engineers
Newburgh Field Office

EcoSource, Inc.
104 Boston Square, Georgetown, Kentucky 40324 Telephone (502) 868-5200

TABLE OF CONTENTS

I. Introduction 1
II. Historic Land Use Practices 1
III. Current Day Land Uses 5
IV. Historic Land Uses 11
V. Background of the Proposed Project Area 14
  A. Hydrology Function 17
  B. Hydraulic Function 18
  C. Geomorphology Function 19
  D. Physicochemical Function 20
  E. Biology Function 21
VI. Background of the Proposed Mitigation Area 21
VII. Justification for the Proposed Mitigation 22
VIII. Watershed Approach 25
  A. Trends in Habitat Loss 27
  B. Presence and Needs of Sensitive Species 27
  C. Project Success 29
  D. Chronic Environmental Problems 30
IX. Summary 32

FIGURES

1. Location Map for the Proposed Project Area and Proposed Mitigation Area 2
2. Land Use Patterns within the Lower Green River 8-digit HUC Area (05110005) 7
3. Land Use Patterns within the Knoblick Creek 12-digit HUC Area (051100050104) 9
4. Land Use Patterns within the Lower East Fork Deer Creek-Deer Creek 12-digit HUC Area (051100050105) and Steamport Landing 12-digit HUC Area (051100050402) 10
5. Stream Function Pyramid – Functions and Parameters 15

TABLES

1. Land Uses within the Lower Green River 8-digit HUC Area (05110005) 6
2. Land Uses within the Affected 12-digit HUC Drainage Areas 8
3. Hydric Soil Land Uses within the Lower Green River 8-digit HUC (05110005) 12
4. Wetland Area within the Lower Green River 8-digit HUC (05110005) 13
5. Summary of Habitat Parameters Tabulated in the EPA RBP Habitat Sheets 16
6. Water Quality Impairments to Knoblick Creek (KY495850 0) mile 0.0-9.1 (mouth to headwaters) 30

I. INTRODUCTION

Sebree Mining LLC proposes to use out-of-kind mitigation for the compensation of stream losses at the proposed Sebree South mine. This document is a follow up to the previously submitted "Preliminary Mitigation Site Assessment" July 2014, for the proposed mitigation site located in Webster County, Kentucky. A request was made by the permit reviewer to provide justification for out-of-kind mitigation for the project impacts. This document provides a discussion for use of out-of-kind mitigation. Figure 1 illustrates the locations of both the mine area and the mitigation area.

II. HISTORIC LAND USE PRACTICES

In a 1980 report by Thomas Dahl of the U.S. Fish and Wildlife Service[1], he determined that since the 1780's, the state of Kentucky had lost 81% of its total wetland area. Dahl estimated that in the 1790's, Kentucky would have been covered with 1.57 million acres of wetlands. As of the issuance of the report, Kentucky only had approximately 300,000 acres of wetlands remaining, which constituted an 81% loss as of the date of the report. The abundance of this acreage was lost in the Western Kentucky region and much of it along the floodplains of streams and rivers.

Frayer et al[2] assessed the sources of wetland loss in the conterminous United States. The study outlined in this report spanned the approximate period of the 1950's to 1970's. In the category of palustrine, vegetated wetlands, there occurred a loss of 11,000,000 acres of wetlands. The majority of this loss was due to agricultural conversion. This total loss can be broken down as follows: 6 M acres palustrine-forested, 4.7 M acres palustrine-emergent, and 0.3 M acres palustrine-scrub/shrub. Within the Mississippi flyway alone, there occurred a loss of 4.5 M acres of palustrine-forested wetlands. Within the combined Atlantic and Mississippi flyways, urban development accounted for the greatest loss measuring the approximate size of the state of Rhode Island.

[1] Dahl , T.E. 1990. USDI, Fish and Wildlife Service. Wetlands Losses in the United States 1780's to 1980's, Report to Congress, Washington DC, 13 pp.
[2] Frayer, W.E., T.J. Monahan, D.C. Bowden, F.A. Graybill. 1983. U.S. Fish and Wildlife Service. Wetlands and Deepwater Habitats in the Conterminous United States, 1950's to 1970's.

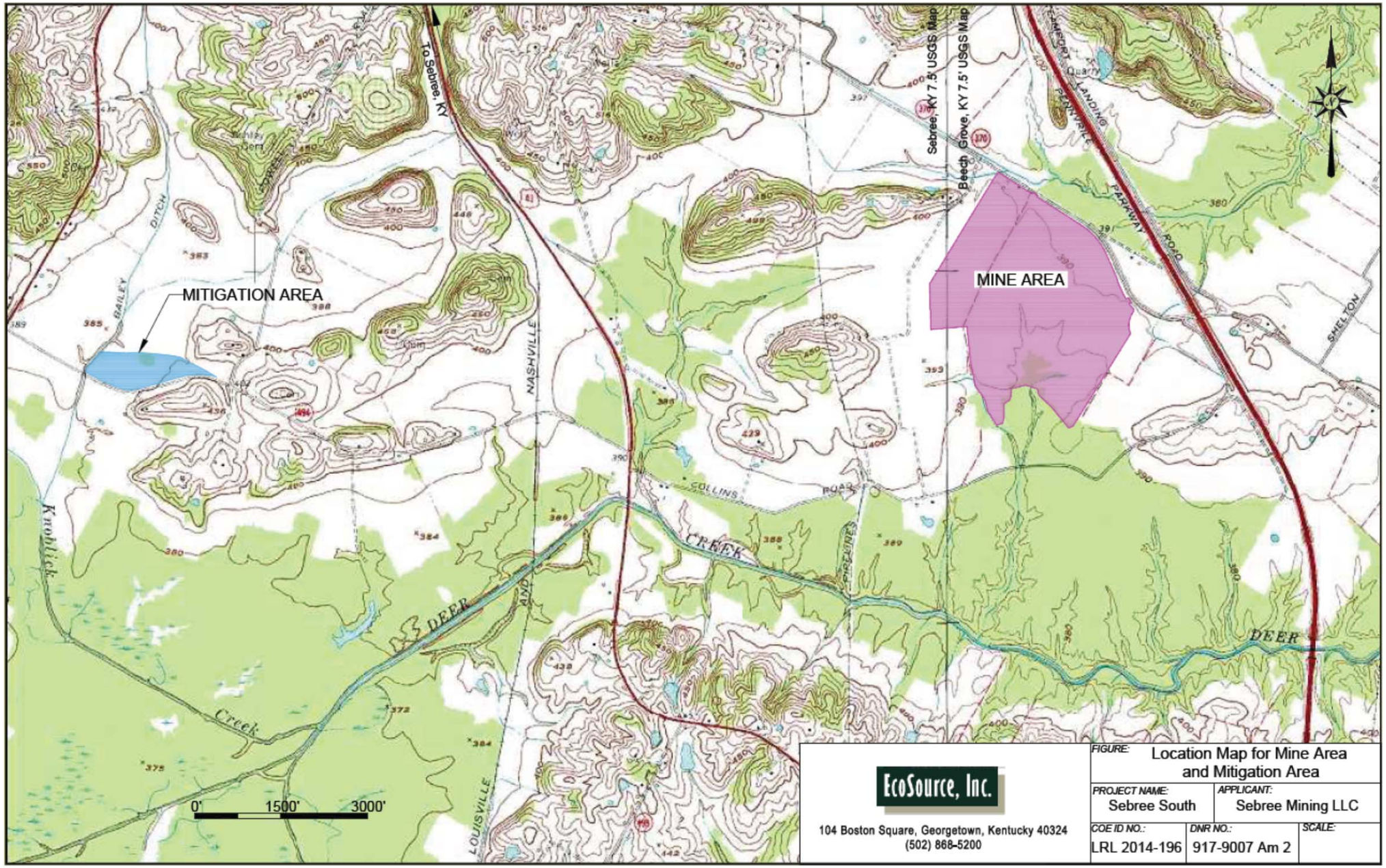

Figure 1. Location map for the proposed project area and proposed mitigation area.

The USGS produced a summary of wetland resources for all 52 states[3]. In Kentucky, loss of wetland area has occurred primarily from conversion to cropland and pastureland. Most of these conversions have been made in western Kentucky. Rates of conversion had slowed due to changes in government subsidy programs, lower agricultural-commodity prices, and scarcity of remaining forested wetlands. However, recent increases in these commodity prices have the potential to increase these wetland losses. Only 20% of the remaining naturally occurring wetlands in Kentucky are forested.

A recent study by Elliott et al[4], researched the historical ecosystem of a stream in Lancaster County, Pennsylvania. Their research involved examination of sediments and sub-fossil leaf flora found in legacy sediments of a mill dam. From this research, they determined that many present-day valleys with incised meandering streams and unstable banks replaced ecologically-healthy, tussock-sedge wetlands, with anastomosing channels. These wetlands would have been positioned adjacent to upland hardwood forests. Leaf litter from these hardwoods was transported downstream to the wetlands to be deposited onto hydric soils. After excavating through the legacy sediments, these relict hydric soils were easily identified as the parent material that supported these historic wetlands. Although this research represents a Piedmont landscape, the same conclusions can be transferred to areas similarly transformed by European settlers.

In the late 1700's to late 1800's, many landowners had their own water powered grinding and/or saw mills, such as researched by Elliott et al. Walter and Merritts[5] developed a map of mill dam density per county based upon U.S. manufacturing census data published in 1841. Based upon this information, more than 65,000 water-powered mills existed in 842 counties in the eastern United States. The same data documented that in the combined Webster, Union, and Hopkins Counties of 1841, from which Webster County was derived, there could have been a mill density ranging from 0-0.05 mills/square kilometer. Based on Webster County's area of 870.2 km^2, that would translate into around a maximum of 44 mills in production in the county as of 1841. These many manipulations to the headwater and valley streams in the region would have had a profound negative effect on the streams. These dams combined with timbering operations and agricultural conversion would have eradicated forested and emergent wetlands that are so vital to the region.

[3] United States Geological Survey. 1996. Compiled by Judy D. Fretweil, John S. Williams, and Phillip J. Redman. USGS Water-Supply Paper 2425. National Water Summary on Wetland Resources.
[4] Elliott, Sara J., Peter Wilf, Robert C. Walker, Dorothy J. Merritts. 2013. Subfossil Leaves Reveal a New Upland Hardwood Component of the Pre-European Piedmont Landscape, Lancaster County, Pennsylvania. PLOS ONE Volume 8, Issue 11, pp 1-26.
[5] Walter, Robert C. and Dorothy J. Merritts. 2008. Natural Streams and the Legacy of Water-Powered Mills. Science Volume 319, pp 299-304.

In addition to these milling and agriculture related land use practices, the USGS stated in their 1996 study that the disparate loss of forested wetlands might have also been due to stream channelization and large scale drainage projects. Species changes would have resulted from a reduction in flooding frequency and duration. A study on the Lower Wabash River system showed that anthropogenic changes in the watershed from 19th century to present have caused a shift in species that were found on the historic floodplain[6]. The flooding regime was permanently altered which lead to a change in species composition, removing several species from the floodplain soil series. Present-day forests in that watershed are found on flood-prone lands, river margins, and areas with high water tables that are unsuitable for development or agriculture. Similar alterations and modifications to the flooding regime have occurred throughout every major river system in the eastern United States.

The EPA conducted a study that statistically determined the condition of the nation's streams and small rivers.[7] The study area was broken down into nine ecoregions, of which the proposed project and mitigation areas are contained within the Temperate Plains Ecoregion. This ecoregion includes 342,200mi^2 or 11.4% of the United States. Few species are considered to be endemic to the region, but aquatic species have adapted to the prevalent warm, shallow stream environments. As compared to the reference condition for this ecoregion, some of the indicators of stressors (based on stream miles) determined from this study area follow:

- About 12% have high levels of phosphorus and 13% have medium levels.
- About 41% have high levels of nitrogen, 17% have medium levels.
- About 38% have high and 58% have intermediate levels of riparian disturbance.
- Streambed sediments are in poor condition in 20% and 12% are in fair condition.
- In-stream fish habitat is in poor condition in 39% and 19% are in fair condition.
- Based on the macroinvertebrate index, 37% are in poor condition, 37% are in fair condition.

Results for any ecoregion may not be extrapolated to an individual state or stream within the region because the study design was not intended to characterize stream conditions at these finer scales. However, the results adequately illustrate stream conditions at a larger scale in an area that has experienced an abundance of human influenced land alterations.

[6] Marion T. Jackson, Indiana State University. 2006. "Forest communities and tree species of the lower Wabash River basin," Proceedings of the Indiana Academy of Science 115(2):94-102.
[7] US EPA, Office of Water. 2006. Draft Wadeable Streams Assessment – A Collaborative Survey of the Nation's Streams. EPA 841-B-06-002

III. CURRENT DAY LAND USES

The proposed project and mitigation areas are located within the Lower Green River 8-digit HUC drainage area. A land use study was performed to determine the present-day land uses within this 8-digit HUC area. The main tool used to determine these land uses was the National Land Cover Dataset for 2011.[8] This is the most current land use dataset available at this time. The dataset uses a 16-class land cover classification scheme with a spatial resolution of 30 meters.

The Lower Green River consists of drainages contributed by eight, Kentucky counties including: Breckinridge, Daviess, Hancock, Henderson, Hopkins, McLean, Ohio, and Webster. The total area of the Lower Green River 8-digit HUC is 590,713.5 acres (923 mi^2). Table 1 provides the breakdown of land uses. Figure 2 is an illustration of the land use pattern within the Lower Green River watershed.

The Lower Green River watershed is dominated by cultivated cropland which comprises almost 49% of the total area, followed by deciduous forest with 29%. Total developed area including low, medium, high density, and open developed area comprises 7% of the total area. The combined total of emergent and forested wetlands within the Lower Green River drainage area comprise only 1.8% of the total area.

In addition to the Lower Green River, a study was undertaken of the land uses within the 12-digit HUC areas. The proposed project area was included, which is in the Steamport Landing-Green River (051100050402) and the Lower East Fork Deer Creek-Deer Creek (051100050105) drainages. Also included was the proposed mitigation site located within the Knoblick Creek (051100050104) drainage. The land use classification method used for the Knoblick Creek drainage was based upon the National Land Cover Dataset for 2011. Since the land use surveys performed for the remaining two drainages was performed before the release of the 2011 dataset, the classification method used was based upon the National Land Cover Dataset for 2006.[9] Table 2 provides a breakdown of these land uses. Figures 3 and 4 provide an illustration of the land use patterns within these three 12-digit HUC drainages.

[8] Jin, S., L. Yang, P. Danielson, C. Homer, J. Fry, and G. Xian. 2013. A comprehensive change detection method for updating the National Land Cover Database to circa 2011. Remote Sensing of Environment 132:159-175.
[9] Fry, J., G. Xian, S. Jin, J. Dewitz, C. Homer, L. Yang, C. Barnes, N. Herold, and J. Wickham. 2011. Completion of the 2006 National Land Cover Database for the Conterminous United States, PE&RS 77(9):858-864.

Table 1. Land Uses within the Lower Green River 8-digit HUC (05110005)

Land Use Type	Breckinridge		Daviess		Hancock		Henderson		Hopkins		McLean		Ohio		Webster		Total	
	Acres	%	Acres	%	Acres	%	Acres	%	Acres	%	Acres	%	Acres	%	Acres	%	Acres	%
Barren Land (rock/sand/clay)	0.0	0.0	257.1	0.1	0.0	0.0	313.6	0.3	15.6	0.1	13.1	0.0	26.0	0.1	42.6	0.0	667.9	0.1
Cultivated Crops	0.0	0.0	121071.3	54.9	668.4	4.2	58343.0	56.0	6749.8	33.2	54794.9	55.8	8529.6	21.0	37464.1	41.6	287621.1	48.7
Deciduous Forest	876.6	93.4	44103.6	20.0	12731.1	79.1	24201.9	23.2	9920.3	48.9	25530.9	26.0	22567.1	55.5	33188.7	36.9	173120.0	29.3
Developed Low Intensity	0.0	0.0	5783.9	2.6	2.4	0.0	591.8	0.6	40.5	0.2	226.1	0.2	27.9	0.1	474.1	0.5	7146.6	1.2
Developed Medium Intensity	0.0	0.0	2163.1	1.0	1.0	0.0	241.1	0.2	4.3	0.0	126.3	0.1	2.6	0.0	255.2	0.3	2793.5	0.5
Developed High Intensity	0.0	0.0	666.9	0.31.0	1.1	0.0	56.7	0.1	0.7	0.0	68.1	0.1	0.0	0.0	131.6	0.1	925.1	0.2
Developed Open Space	4.9	0.5	14175.2	6.4	372.6	2.3	4872.9	4.7	756.5	3.7	5179.8	5.3	1377.9	3.4	3313.7	3.7	30053.6	5.1
Emergent Herb-aceous Wetlands	0.0	0.0	982.8	0.4	1.7	0.0	1017.9	1.0	28.8	0.1	363.7	0.4	13.3	0.0	801.1	0.9	3209.3	0.5
Evergreen Forest	0.0	0.0	1986.1	0.9	18.3	0.1	1308.3	1.3	327.0	1.6	1007.1	1.0	35.5	0.1	1025.9	1.1	5708.2	1.0
Grassland/ Herbaceous	18.0	1.9	1666.5	0.8	1124.4	7.0	259.6	0.2	427.0	2.1	488.1	0.5	922.0	2.3	1053.1	1.2	5958.7	1.0
Mixed Forest	0.0	0.0	3.8	0.0	3.3	0.0	0.0	0.0	0.0	0.0	1.0	0.0	2.8	0.0	0.0	0.0	10.9	0.0
Open Water	21.9	2.3	1291.7	0.6	26.7	0.2	1826.7	1.8	135.8	0.7	1188.7	1.2	193.6	0.5	594.4	0.7	5279.5	0.9
Pasture/Hay	0.0	0.0	23839.2	10.8	892.0	5.5	8919.0	8.6	1791.0	8.8	7217.5	7.4	6377.8	15.7	10327.3	11.5	59363.9	10.0
Scrub/Shrub	17.5	1.9	125.1	0.1	247.2	1.5	42.8	0.0	8.0	0.0	200.6	0.2	506.4	1.2	38.9	0.0	1186.4	0.2
Woody Wetlands	0.0	0.0	2381.4	1.1	0.0	0.0	2114.6	2.0	98.1	0.5	1745.4	1.8	49.1	0.1	1280.0	1.4	7668.7	1.3
Totals*	938.9	100.0	220497.7	100.0	16090.1	100.0	104109.8	100.0	20303.3	100.0	98151.3	100.0	40631.7	100.0	89990.8	100.0	590713.5	100.0

*The totals are the result of internal numbers rounding.

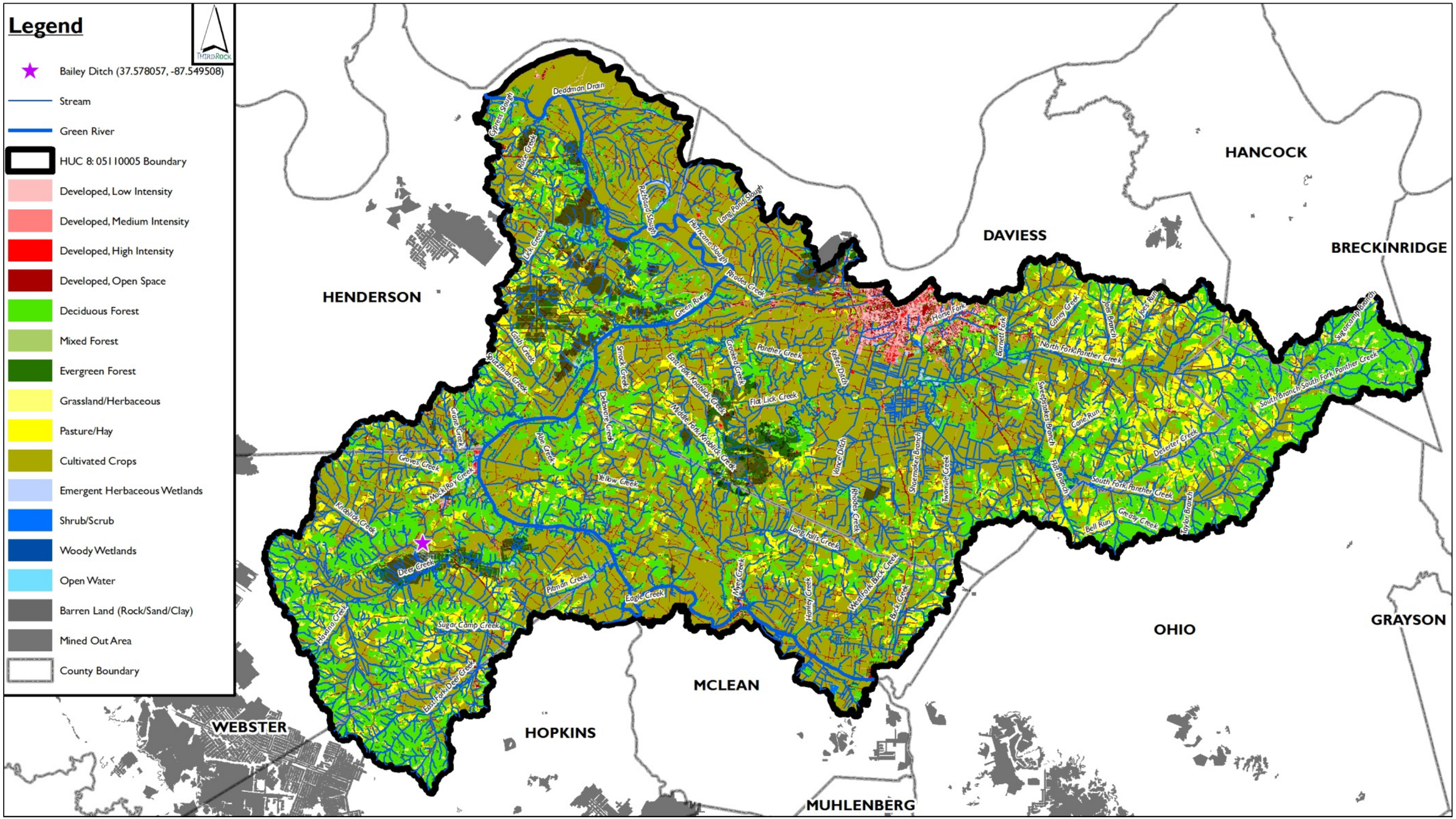

Figure 2. Land use pattern within the Lower Green River 8-digit HUC area (05110005)

Table 2. Land Uses within the affected 12-digit HUC drainage areas.

Land Use Type	Knoblick Creek 051100050104 (proposed mitigation site)		Lower East Fk Deer Creek-Deer Creek 051100050105 (proposed project impacts)		Steamport Landing-Green River 051100050402 (proposed project impacts)	
	Acres	%	Acres	%	Acres	%
Barren Land (rock/sand/clay)	7.0	0.0	0.0	0.0	4.6	0.0
Cultivated Crops	8269.3	50.6	7984.3	41.9	4517.8	45.0
Developed (Low, Medium, High Density & Open Space)	614.1	3.8	855.0	4.4	768.2	7.6
Forest (Deciduous/ Evergreen)	5906.4	36.1	6618.2	34.8	3202.3	31.9
Grassland/ Herbaceous	106.5	0.7	110.5	0.6	32.4	0.3
Open Water	78.5	0.5	27.2	0.1	359.0	3.6
Pasture/Hay	1185.7	7.3	2573.5	13.5	773.6	7.7
Scrub/Shrub	1.6	0.0	5.4	0.0	2.0	0.0
Wetlands (Emergent/Woody)	184.8	1.1	863.7	4.6	379.5	3.8
Totals*	16354.0	100.0	19037.9	100.0	10039.5	100.0

*The totals are the result of internal numbers rounding.

In all three 12-digit HUC drainages, cultivated crops is the main land use, followed by forest. The highest percentage of cultivated crops (50.6%) occurs in the Knoblick Creek drainage, where the highest percentage of forest (36.1%) also occurs. The greatest percentage of wetlands (4.6%) occurs in the Lower East Fork Deer Creek drainage. The proposed mitigation site is located within the Knoblick Creek drainage, which has the lowest percentage of wetlands (1.1%) and highest percentage of cultivated crops (50.6%).

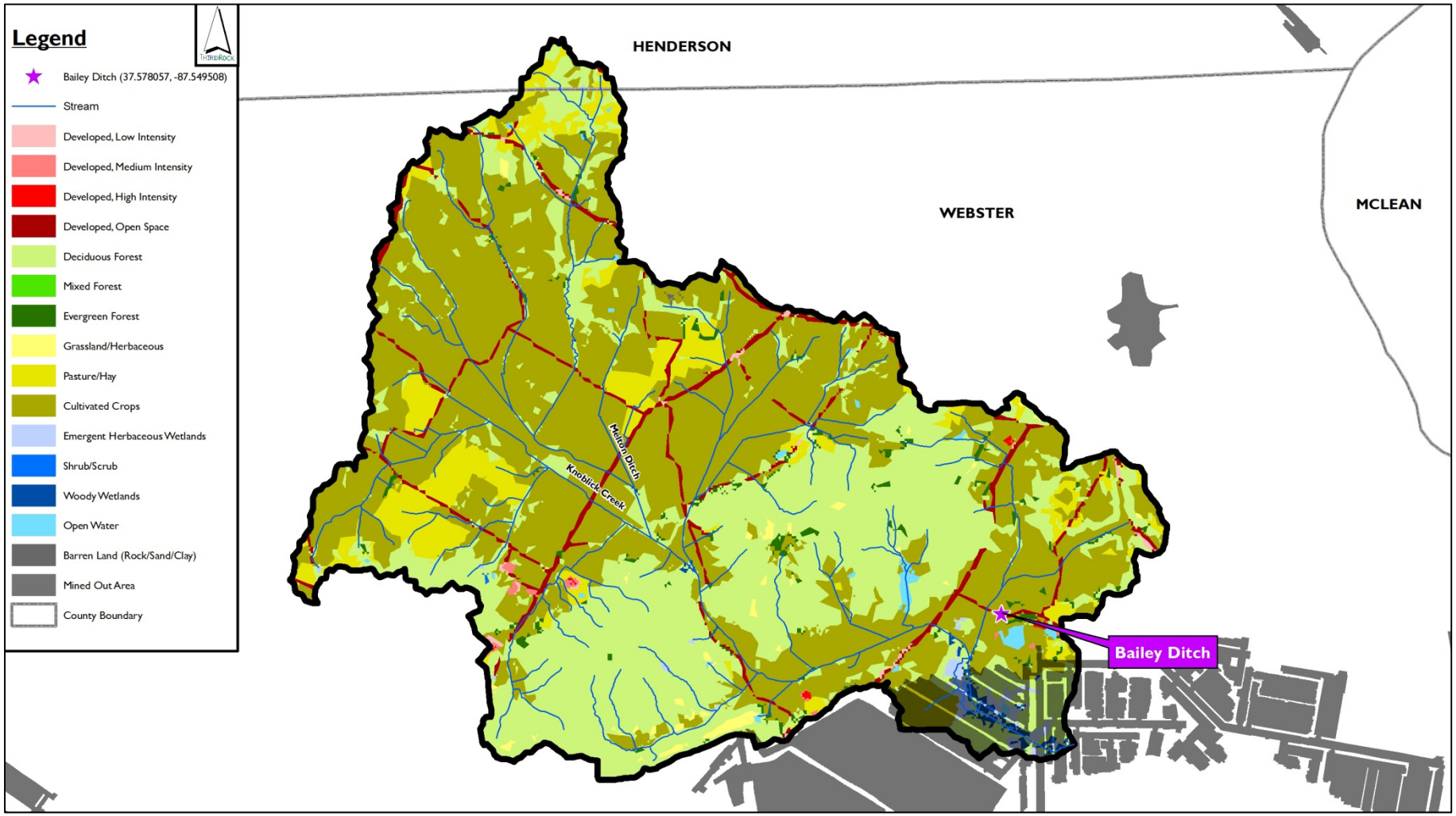

Figure 3. Land use pattern within the Knoblick Creek 12-digit HUC area (051100050104)

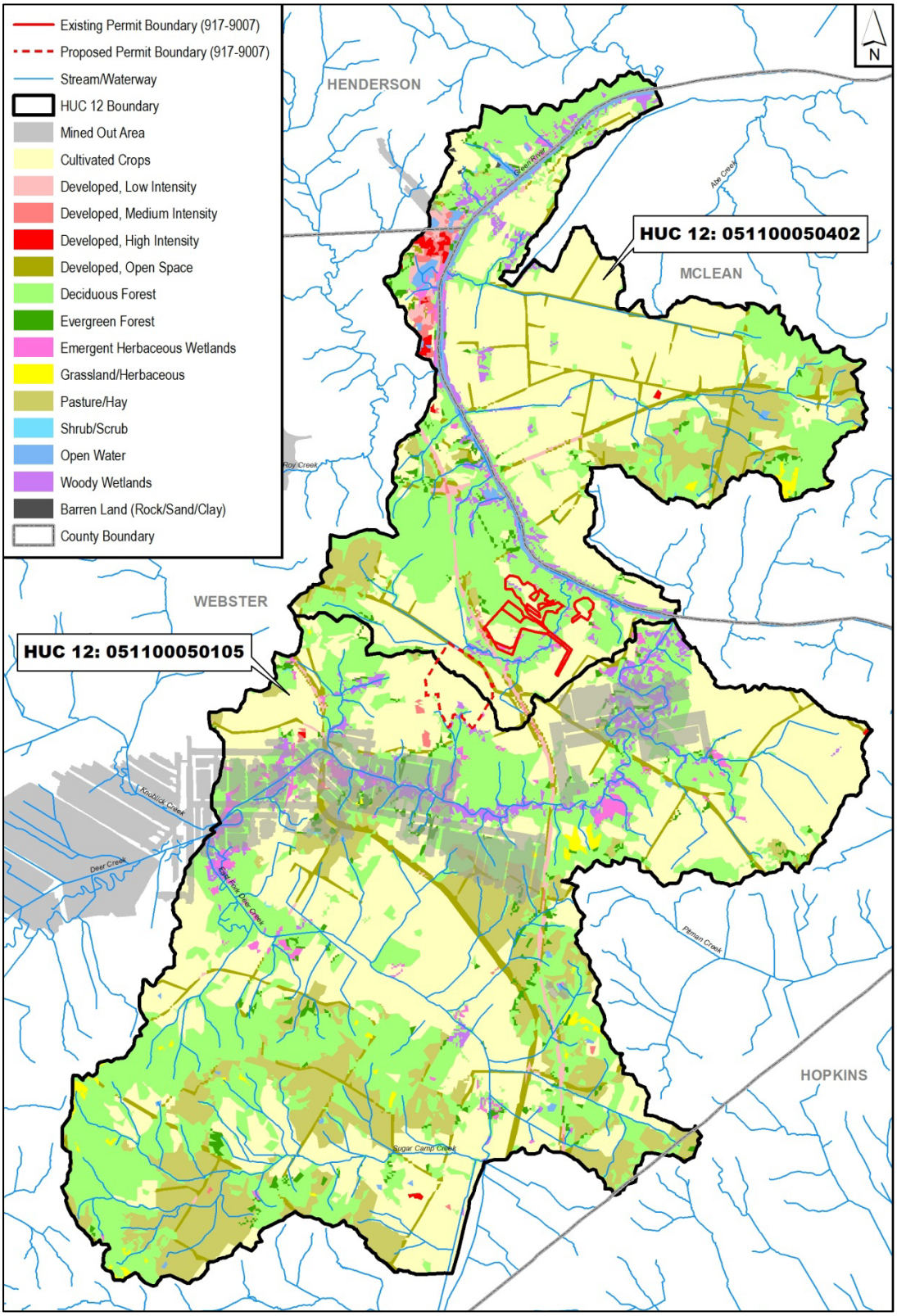

Figure 4. Land use patterns within the Lower East Fork Deer Creek-Deer Creek 12-digit HUC area (051100050105) and Steamport Landing-Green River 12-digit HUC area (051100050402)

IV. HISTORIC LAND USES

The pre-settlement land use patterns were undeniably different than current-day patterns. But, given the known settlement history of the Midwest, an appreciable amount of land was converted from forest, grasslands, or wetlands to agricultural usage. Currently, within the Lower Green River 8-digit HUC area, cropland occupies 48.7% of the total area, followed by forest which comprises 30.3% of the total area. Other forms of land uses that were formed by conversion are developed land and grassland-pasture-hayland, which comprise 7.0% and 11.0% of the total area, respectively.

In the 1980 report by Thomas Dahl, he stated that Kentucky in the 1790's was covered by 1.57 million acres (2453 mi^2) of wetlands, which equates to approximately 6.1% of the total area of the state. By the 1980's, only 1.2% of the state was occupied by wetlands. Dahl proceeded to state that the abundance of wetland acreage was lost in the Western Kentucky region and much of it along the floodplains of streams and rivers.

In order to determine the potential amount of wetland loss within the Lower Green River 8-digit HUC drainage area, a land use study was performed with the intent of capturing the pre-settlement area of wetlands only. The method used to complete this study was to overlay the mapped hydric soils[10] with the 2011 land use dataset to determine areas of potential past wetlands and the corresponding current-day land uses. Table 3 provides a breakdown of the land uses present on these mapped hydric soils. Table 4 summarizes the wetland areas and losses within the Lower Green River 8-digit HUC area.

The Lower Green River drainage area historically contained 273,425.8 acres of wetlands, based upon the presence of mapped hydric soils. That amount of wetlands equates to 46.3% of the total drainage area. Given that the current percentage of wetlands area within the same drainage is only 1.8%, that reduction constitutes a loss of ***96.1%*** of the total wetland area. A combination of the agricultural related land use types of cultivated crops, grassland/herbaceous, open water, pasture/hay, and scrub/shrub yielded that 71.4% of the pre-settlement wetland area was converted for agricultural purposes. A combination of the development related land use types including low/medium/high density, and barren land yielded that 7.1% of the pre-settlement wetland area was converted to support housing, industrial, commercial, etc. needs. A total of 18.2% is currently in forestland, but was not mapped as wetlands.

[10] USDA, Natural Resource Conservation Service. 2014. Statewide Soil Survey Geographic Data (SSURGO) incorporating the official soils database (NASIS).

Table 3. Hydric Soil Land Uses within the Lower Green River 8-digit HUC (05110005)

Land Use Type	Breckinridge		Daviess		Hancock		Henderson		Hopkins		McLean		Ohio		Webster		Total	
	Acres	%	Acres	%	Acres	%	Acres	%	Acres	%	Acres	%	Acres	%	Acres	%	Acres	%
Barren Land (rock/sand/clay)	0.0	0.0	189.5	0.2	0.0	0.0	12.4	0.0	0.0	0.0	0.5	0.0	10.8	0.1	1.1	0.0	214.2	0.1
Cultivated Crops	0.0	0.0	72206.8	63.7	444.6	35.6	35312.0	68.8	4217.2	69.4	37762.4	71.0	5716.0	56.3	23301.9	61.2	178960.8	65.5
Deciduous Forest	0.0	0.0	17158.2	15.1	526.2	42.1	8946.8	17.4	1060.5	17.5	8399.5	15.8	2712.1	26.7	8788.4	23.1	47591.8	17.4
Developed Low Intensity	0.0	0.0	3244.7	2.9	1.1	0.1	249.4	0.5	16.1	0.3	155.9	0.3	9.5	0.1	220.9	0.6	3897.6	1.4
Developed Medium Intensity	0.0	0.0	1303.1	1.1	0.0	0.0	113.0	0.2	2.6	0.0	75.2	0.1	0.0	0.0	155.8	0.4	1649.8	0.6
Developed High Intensity	0.0	0.0	422.9	0.4	0.0	0.0	0.5	0.0	0.7	0.0	50.3	0.1	0.0	0.0	80.7	0.2	555.0	0.2
Developed Open Space	0.0	0.0	6426.6	5.7	61.9	5.0	1859.9	3.6	296.3	4.9	2780.8	5.2	446.7	4.4	1300.1	3.4	13172.3	4.8
Emergent Herb-aceous Wetlands	0.0	0.0	712.0	0.6	0.0	0.0	755.2	1.5	12.5	0.2	282.0	0.5	9.2	0.1	680.2	1.8	2451.3	0.9
Evergreen Forest	0.0	0.0	1079.4	1.0	0.0	0.0	512.9	1.0	34.1	0.6	272.2	0.5	0.5	0.0	353.8	0.9	2252.9	0.8
Grassland/ Herbaceous	0.0	0.0	1140.1	1.0	119.1	9.5	35.4	0.1	3.6	0.1	25.8	0.0	53.8	0.5	75.7	0.2	1453.5	0.5
Mixed Forest	0.0	0.0	0.3	0.0	0.3	0.0	0.0	0.0	0.0	0.0	0.0	0.0	0.0	0.0	0.0	0.0	0.6	0.0
Open Water	0.0	0.0	244.0	0.2	0.5	0.0	380.6	0.7	15.0	0.2	256.7	0.5	25.3	0.2	66.7	0.2	988.8	0.4
Pasture/Hay	0.0	0.0	7236.0	6.4	88.4	7.1	1428.3	2.8	335.9	5.5	1334.8	2.5	1092.6	10.8	1991.6	5.2	13507.6	4.9
Scrub/Shrub	0.0	0.0	53.1	0.0	6.7	0.5	5.1	0.0	3.2	0.1	144.3	0.3	35.5	0.4	16.9	0.0	264.8	0.1
Woody Wetlands	0.0	0.0	1931.0	1.7	0.0	0.0	1738.8	3.4	77.5	1.3	1613.2	3.0	38.8	0.4	1065.6	2.8	6464.8	2.4
Totals*	0.0	0.0	113347.7	100.0	1248.7	100.0	51350.2	100.0	6075.2	100.0	53153.6	100.0	10150.8	100.0	38099.5	100.0	273425.8	100.0

*The totals are the result of internal numbers rounding.

Table 4. Wetland Area within the Lower Green River 8-digit HUC (05110005)

	Breckinridge (938.9 acres)		Daviess (220497.7 acres)		Hancock (16090.1 acres)		Henderson (104109.8 acres)		Hopkins (20303.1 acres)		McLean (98151.3 acres)		Ohio (40631.7 acres)		Webster (89990.8 acres)		Total (590713.5 acres)	
	Acres	%	Acres	%	Acres	%	Acres	%	Acres	%	Acres	%	Acres	%	Acres	%	Acres	%
Current Wetland Area*	0	0.0	3364.2	1.5	1.7	0.0	3132.5	3.0	126.9	0.6	2109.1	2.1	62.4	0.2	2081.1	2.3	10878.0	1.8
Historic Wetland Area**	0	0.0	113347.7	51.4	1248.7	7.8	51350.2	49.3	6075.2	29.9	53153.6	54.2	10150.8	25.0	38099.5	42.3	273425.8	46.3
Wetland Loss	0	0.0	109983.5	97.1	1247.0	100	48217.7	93.9	5948.3	98.0	51044.5	96.1	10088.4	99.2	36018.4	94.6	262547.8	96.1
Rank of wetland acres lost in watershed	8th		1st		7th		3rd		6th		2nd		5th		4th			
Rank of % wetlands lost in drainage area	8th		4th		1st		7th		3rd		5th		2nd		6th			

*Sum of emergent and woody wetlands from Table 2.
**Totals from Table 2.

Within the eight counties that comprise the Lower Green River 8-digit HUC area, Daviess County (113,347.7 acres) followed by McLean County (53,153.6 acres) contained the greatest area of historical wetlands. Webster County, the location of the proposed impacts and mitigation site, ranked 4th in total loss of wetland acres. Based on the ranking of % wetland acres lost, Hancock County ranked 1st (100%), followed by Ohio County who ranked 2nd (99.2%). Webster County ranked 6th (94.6%) in percent of wetland acres lost. With the exclusion of Breckinridge County, which had 0% wetland acres converted to other land uses, the percent of wetland loss ranged from 93.9%-100%. Based on the remaining seven counties, the average wetland loss per county was 97%.

V. BACKGROUND OF THE PROPOSED PROJECT AREA

The proposed project area consists of upland cropland, forested slopes and bottomlands, and intermittent streams. The cropland is planted annually with row crops. During field reconnaissance, large scale changes due to historic drainage improvements in the upland fields were noted. These changes included installation of tiles in the crop fields, deepening through excavation (possibly with draglines) the receiving streams located south of the fields, routing of drainage tiles into these streams, development of ridges from disposal of excavated soils, and deepening and widening of more downstream channels through incision from increased discharge and velocity of flow. The project will impact 0.194 acre of wetland that formed within these excavated areas. The stream impacts include a total of 2,170' of intermittent streams with qualities ranging from poor to average.

The majority of the impacts that will be realized to the aquatic system are related to streams and their associated riparian areas. Fischenich[11] detailed five categories of primary functions that streams and riparian corridors support. These categories include: system dynamics; hydrologic balance; sediment processes and character; biological support; and chemical processes and pathways. Each of these five categories were further assigned three key functions, components, and processes. A hierarchy was developed of these 15 functions, of which habitat quality was the lowest ranked function . Habitat was the lowest ranked function because it was influenced by only three other functions inferring that the other functions are relatively insensitive to habitat change. However, habitat was affected by all but three of the other functions. As such, this implies habitat may be a good indicator of an impacted system.

[11] Fischenich, J. Craig. 2006. Functional Objectives for Stream Restoration. ERDC TN-EMRRP SR-52. USAE Research and Development Center, Vicksburg, MS.

Harman et al[12] created a stream functions pyramid based upon Fischenich's hierarchy of functions, as shown in Figure 5. The purpose of the pyramid was to develop an approach for evaluating stream restoration projects to assure that all necessary processes were considered. The authors expanded the pyramid to include the functions and parameters that are essential to each tier in the hierarchy. The pyramid is separated by dashed lines to illustrate that the transition between the five categories is a fluid boundary, allowing for flow in both directions. However, everything in the pyramid is controlled by geology and regional climate.

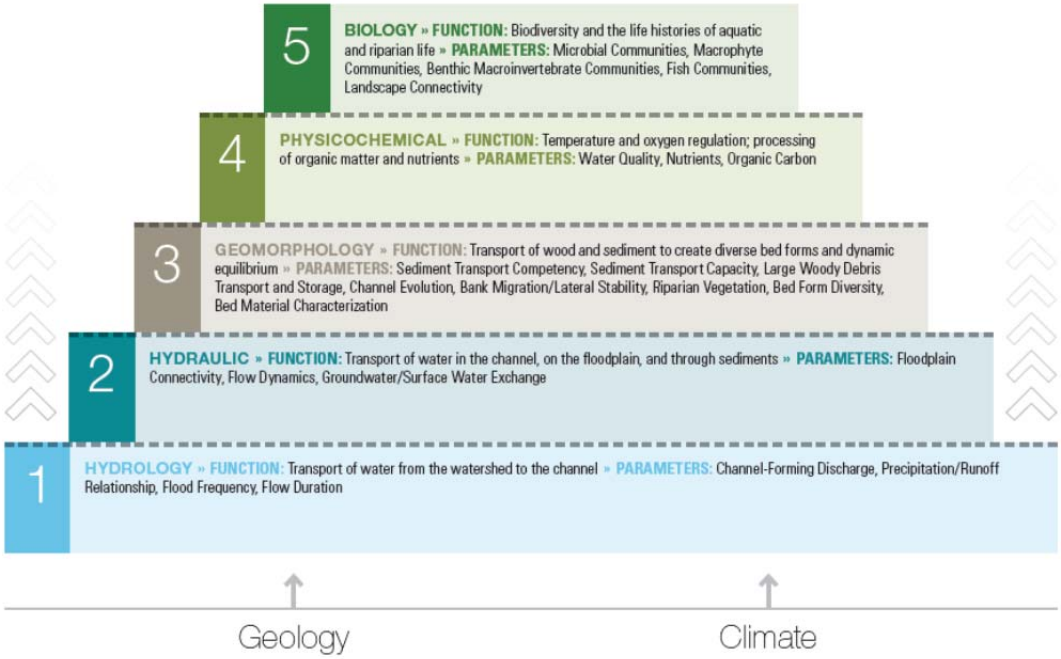

Figure 5. Stream Function Pyramid-Functions and Parameters (excerpted from Harman et al, 2012).

Although, the functional pyramid developed by Harman et al provides a comprehensive view of stream functions, such complex measurements were not performed on the stream reaches that will be impacted. However, within the previously submitted Jurisdictional Determination, a stream habitat assessment was performed using the EPA's Rapid Bioassessment Protocol (RBP) as set forth by Barbour et al.[13] This method incorporates ten separate parameters that qualify the quality of the in-channel habitat and adjacent riparian areas. These scores are further divided into ranges of optimal, suboptimal, marginal, and poor.

[12] Harman, W.R., R. Starr, M. Carter, K. Tweedy, M. Clemmons, K. Suggs, C. Miller. 2012. A Function-Based Framework for Stream Assessment and Restoration Projects. US EPA, Office of Wetlands, Oceans, and Watersheds. Washington DC EPA 843-K-12-006.
[13] Barbour, M.T., J. Gerritsen, B.D. Snyder, and J.H. Stribling. 1999. Rapid Bioassessment Protocols for Use in Streams and Wadeable Rivers: Periphyton, Benthic Macroinvertebrates and Fish, Second Edition. EPA 841-B99-002. U.S. EPA Office of Wetlands, Oceans, and Watersheds.

Table 5 provides the RBP scores for each of the stream reaches that will be impacted by the proposed project.

In a more recent document produced by the Kentucky Division of Water (KDOW)[14], reference reach habitat data were used to develop habitat criteria for the Mississippi Valley-Interior Rivers bioregion. For headwater (<5 mi^2) streams, the following KDOW ratings were developed: Good ≥135, Fair 114-134, Poor ≤113. Based on this rating system, all six stream reaches are rated as Poor. However, Reach 12 has a score of 113, which is only one point less than a fair rating. The ACE recognizes the condition categories caluclated within the RBP habitat sheet as follows: Optimal=151-200, Suboptimal=101-150, Marginal=51-100, and Poor=1-50. Based upond these ranges, Reaches 9-13 are in the suboptimal range and Reach 26 is considered marginal.

Table 5. Summary of Habitat Parameters tabulated in the EPA RBP Habitat Sheets.

Habitat Parameter	**Stream Reach**					
	9	**10**	**11**	**12**	**13**	**26**
1. Epifaunal substrate/ available cover	10 marginal	10 marginal	10 marginal	10 marginal	10 marginal	2 poor
2. Pool substrate characterization	10 marginal	10 marginal	10 marginal	11 suboptimal	10 marginal	2 poor
3. Pool variability	5 poor	5 poor	5 poor	6 marginal	5 poor	5 poor
4. Sediment deposition	13 suboptimal	13 suboptimal	13 suboptimal	13 suboptimal	13 suboptimal	2 poor
5. Channel flow status	8 marginal	8 marginal	8 marginal	10 marginal	8 marginal	3 poor
6. Channel alteration	15 suboptimal	15 suboptimal	15 suboptimal	15 suboptimal	15 suboptimal	11 suboptimal
7. Channel sinuosity	8 marginal	8 marginal	8 marginal	8 marginal	8 marginal	6 marginal
8. Bank stability	12 suboptimal	12 suboptimal	12 suboptimal	12 suboptimal	12 suboptimal	10 marginal
9. Vegetative protection	10 marginal	10 marginal	10 marginal	10 marginal	10 marginal	14 suboptimal
10. Riparian vegetative zone width	18 optimal	18 optimal	18 optimal	18 optimal	18 optimal	8 marginal
Totals	109	109	109	113	109	63
KDOW Habitat Rating (see reference footnote)	Poor	Poor	Poor	Poor	Poor	Poor
ACE Habitat Rating (see RBP sheet condition categories)	Suboptimal	Suboptimal	Suboptimal	Suboptimal	Suboptimal	Marginal

[14] Kentucky Division of Water. 2010. Methods for Conducting Resource Extraction Intensive Surveys in Non-OSRW Streams of the Western Kentucky Coalfields. Kentucky Department for Environmental Protection, Division of Water, Frankfort, Kentucky.

As stated by Fischenich, habitat may be a good indicator of an impacted system. As such, these asserted RBP habitat values can be discussed based upon the stream functions pyramid established by Harman et al. Stream Reaches 9-13 are relatively similar; whereas, Reach 26 is markedly poorer as compared to the other reaches. Each of the pyramidal stream functions in relation to the RBP scores is discussed in the following text.

A. HYDROLOGY FUNCTION

The 2012 USDA Farm Census documented that 7,278,098 acres of cropland existed in the state of Kentucky.[15] In addition, 964,414 acres were listed as being tiled or artificially drained (ditches). These totals suggest that +13% of Kentucky's cropland has improvements made to drain poorly-drained soils. Webster County, Kentucky, in the same census year, reported that 91,077 acres of cropland were harvested.

Although the census does not provide a breakdown of tiled/ditched area on a per county basis, the inference can be made that a significant portion of Webster County's harvested cropland is tiled or ditched. The deduction can be made that these altered surface/subsurface drainage systems have a long-term negative impact on localized hydrology. Through the concentration of flows and circumvention of the biological processes that occur in riparian areas, drainage tile effluent has greater peak flows, increased concentrations of nutrients, and either increased or decreased sediment load. [16] The increased outflow can result in streambank erosion, channel incision, and flooding. The alteration of subsurface drainage in extensively tiled watersheds can be so extreme that in many first to third order streams, subsurface flow can constitute 90% of the baseflow during summer months.

Historically, many wetlands have been lost due to land drainage for agricultural uses.[17] In many situations, previously unchannelized portions of the landscape are channelized into existing watersheds, thereby extending the stream network. Increased runoff from agricultural lands has generally caused headward migration of stream channels, leading to incised channels and loss of headwater wetlands.

[15] http://www.agcensus.usda.gov/Publications/2012/Full_Report/Volume_1,_Chapter_1_State_Level/Kentucky/
[16] Committee on Riparian Zone Functioning and Strategies for Management. 2002. Riparian Areas Functions and Strategies for Management. National Academy Press, Washington DC.
[17] Committee on Mitigating Wetland Losses. 2001. Compensating for Wetland Losses Under the Clean Water Act. National Academy Press, Washington DC.

Reaches 9-13 originate at the edges of a cropped field. Drainage tiles were obviously present at the head of the majority of these reaches. Where a tile was not noted, it might not have been exposed to the surface. As such, these streams receive a majority of their base flow from subsurface agricultural drainage. Reach 26 also receives drainage from a cropped field. The presence of a tile network is not known, but the hydrology of this stream has also been permanently changed. The flow regime in these reaches has been permanently altered. All of these reaches were designated as having an intermittent flow regime. The RBP parameter 5 for channel flow status was consistently ranked in the marginal range for Reaches 9-13, and in the poor range for Reach 26. Potentially, the majority of this flow could have been from subsurface sources. Also, obvious changes in the stream channels have occurred due to historic physical alterations to the streams and from later changes from the altered hydrology.

B. HYDRAULIC FUNCTION

As stated previously, the increased outflow from the subsurface drainages can cause streambank erosion, channel incision and flooding. Reaches 9-13 exhibit incision at the outlet of the drainage tile that forms the headwater of each stream. In these originating locations, entrenchment and bank height ratios are high. No true floodplain exists, so there is no connectivity. As the channel progresses downstream, the channel widens and a connection with the floodplain is realized leading to lowered shear stress and stream velocity.

The amount of stream length to be impacted by the proposed project is 2,170 linear feet. These are all stream reaches that likely originate with the outlet of a drainage tile. To some extent, which is unmeasured, these outlets actually extended the natural stream network. In addition, based upon field observations, mechanized channelization of these stream reaches occurred. The receiving streams for Reaches 9-13 and 26 have also to some extent been channelized including widening and deepening. Natural erosional processes have further refined the stream channel. The RBP parameter 6 for channel alteration indicates that no recent channelization has occurred. However, these reaches show physical signs (incising, widening, eroding banks) that result from past channel modifications. Every stream reach scored in the suboptimal range. The RBP parameter 8 for bank stability indicates that Reaches 9-13 have as much as 30% of their stream banks eroding. This places these reaches in the suboptimal range. Reach 26 was rated in the marginal range, which means that 30-50% of the stream banks are actively eroding.

C. GEOMORPHOLOGY FUNCTION

Based upon the stream function pyramid, geomorphology as a function includes the transport of wood and sediment to create diverse bed forms and dynamic equilibrium. The proposed impacts will occur in relatively low-gradient streams. These streams are silt dominated with little to no gravel (2-64 mm) or cobble (64-256 mm) present. As such, the ability is not present to create gravel/cobble dominated riffles. As an alternative, woody debris can provide variability in habitat. Based upon field observations, in-stream woody material was present throughout the upper segments of the proposed impacted reaches, but was lacking further downstream. An abundant supply of small and large woody debris was available from the adjacent riparian areas along Reaches 9-13, but not along Reach 26.

The RBP parameter 1for epifaunal substrate/available cover indicates that Reaches 9-13 were in the marginal range. This classification shows that these reaches have only 10-30% mix of stable habitat and that the substrate is very mobile. Reach 26 was rated as poor for this RBP parameter. The RBP parameter 2 for pool substrate rated Reaches 9-11 and Reach 13 as marginal, and Reach 12 as suboptimal. Reach 26 was rated as poor. The RBP parameter 3 for pool variability was rated as poor for Reaches 9-11, and Reaches 13 and 26 as poor. Reach 12 was rated as marginal. All three of these RBP parameters are indicators of quality and diversity of in-stream available habitat. As such, all of these reaches are lacking in the diversity of habitat needed to support a high quality and highly diverse benthic community. The stream channels show long-term physical impairments from eroding stream banks, and channel widening and incising.

The RBP parameter 4 for sediment deposition rated Reaches 9-13 in the suboptimal range. This rating indicates that the channels were experiencing some new increase in bar formation, with only 20-50% of the channel bottom affected by this deposition. Given that these are silt dominated channels, this is not a detrimental rating. Reach 26 was rated in the poor range. The RBP parameter 6 for channel alteration rated all of the reaches in the suboptimal range. This rating does not require that no channelization have occurred, but that recent channelization (<20 years) has not occurred. As such, Reaches 9-13, which have experienced historical channelization, were rated relatively high. The RBP parameter 7 for sinuosity was rated as marginal for Reaches 9-13 and Reach 26. Based upon field observations, lateral movement of these stream reaches was not obvious and they appeared to be fairly stable. The RBP parameter 6, which has already been discussed under hydraulic function, was rated in the suboptimal range for Reaches 9-13, and marginal for Reach 26. Overall, Reaches 9-13 are

operating in the suboptimal to marginal ranges for factors that affect the geomorphologic functions; while Reach 26 is operating in the suboptimal to poor range.

The riparian RBP parameters rate vegetative protection and zone width. The RBP parameter 9 for vegetative protection was in the marginal range for Reaches 9-13, and in the suboptimal range for Reach 26. Reaches 9-13 lacked essential vegetation on the stream banks that would provide protection to the stream banks during flooding events. The RBP parameter 10 for riparian vegetative zone width was in the optimal range for Reaches 9-13, and only marginal for Reach 26. The surrounding forest along Reaches 9-13 had matured enough to provide and store large woody debris, organic matter, and good root structure.

D. PHYSICOCHEMICAL FUNCTION

These functions relate to elements such as temperature and oxygen regulation, and processing of organic matter and nutrients. The RBP parameters do not score or rate factors related to the physiochemical functions of a stream. However, certain assumptions can be made concerning these qualities based upon the surrounding land uses and channel characteristics. In addition, low gradient, headwater streams are typically lower in oxygen in the summer and fall months as compared to high gradient streams. The maturity of the riparian zone around Reaches 9-13 is beneficial to providing sufficient organic matter and nutrients to the stream. Also, the maturity of the woodlands surrounding the stream assist in temperature and oxygen regulation.

Ahiablame et al[18] performed a study in northwest Indiana to determine the effect tile discharge has on ambient nutrient concentration, and nutrient retention and transport in drainage ditches. The results of the study showed lower soluble phosphorus and ammonium nitrogen concentrations, and greater nitrate nitrogen concentration in the tile effluent as compared to the ditch water. These results also appeared to alternate across the three sampled flow regimes. The net uptake lengths for all nutrients was relatively long, especially for nitrate nitrogen indicating nutrients were generally not assimilated in these drainage systems. As a result these receiving ditches were nutrient rich streams that have an influencing effect on downstream waters. This factor is of great importance given the worsening condition of the hypoxia in the Gulf of Mexico. The presence of a tiled drainage network feeding the base flow for each of Reaches 9-13 and 26, assures that nutrient and pollutant loading exceeds the

[18] Ahiablame, L.M., I. Chaubey, D.R. Smith, B.A. Engel. 2011. Effect of Tile Effluent on Nutrient Concentration and Retention Efficiency in Agricultural Drainage Ditches. Agricultural Water Management 98(8):1271-1279.

natural condition. The study performed by Ahiablame et al represented the conditions of a drainage ditch (receiving stream) that was a typical drainage ditch with no riparian zone and row crops to the edge of the ditch. The only potential for nutrient assimilation that exists for Reaches 9-13 is the mature, intact riparian area that exists along these streams. Although headwater streams in Illinois were previously thought to be a location for removal of nitrogen through denitrification, better habitats for removal might be reservoirs and floodplain wetlands, especially in tile drained watersheds.[19]

E. BIOLOGY FUNCTION

No site specific biological studies were performed on the proposed impacted reaches. However, certain assumptions can be made concerning the quality and integrity of the biotic community in the proposed impacted stream reaches. Taxa diversity would be low and tolerances would be high. Possibly, due to an increase in base flow from the tile network, life histories of the taxa present would be longer lived and more indicative of larger stream systems with more constant flows. No in-stream macrophytes were noted during field reconnaissance, illustrating the paucity of diverse habitat. However, present is a strong connection to the landscape due to a lack of anthropogenic activity along these stream corridors in the immediate vicinity of the proposed project area. The terrestrial and the aquatic systems are well developed and allow for maximum exchange and usage along Reaches 9-13. This connectivity is not as evident or present along Reach 26.

VI. BACKGROUND OF THE PROPOSED MITIGATION AREA

The proposed mitigation area has been detailed in a document titled "Preliminary Mitigation Site Assessment" July 2014. This document should be referenced for the assessment of the site based upon field reconnaissance.

The proposed mitigation area contains bottomland that is annually-planted in row crops. Shallow drainage ditches originate at the east end of the property and flow in a westerly direction along the north and south boundaries. These ditches discharge into Bailey Ditch, a tributary of Knoblick Creek. Large-scale, historic channelization created Bailey Ditch, leaving a deeply entrenched stream with depths ranging from

[19] Royer, Todd V., Jennifer L.Tank, and Mark B. David. 2004. Transport and Fate of Nitrate in Headwater Agricultural Streams in Illinois. Journal of Environmental Quality 33:1296-1304.

10-15 feet to top of bank, disconnecting Bailey Ditch from the floodplain. The presence of drainage tiles was not clearly evident, but the possibility does exist that tiling is present. Results of the field investigation proved that hydric soils do exist on the area, and are prominent below the approximate nine-inch, plow zone. A review of aerial photography revealed saturated areas that correlated with the soils investigation results. The drainage area of Knoblick Creek and its associated tributaries was historically and regionally important in the early 1800's for the commercial production of salt.[20]

Flooding of Bailey Ditch is a recurring problem as expressed by company representatives and as documented in the Federal Register[21]. The Federal Emergency Management Agency (FEMA) published proposed determinations of base flood elevations (1% annual chance) for communities participating in the National Flood Insurance Program. In this publication, Bailey Ditch was noted as experiencing recurrent flooding due to backwater effects from the Green River. Specifically, the area noted was on Bailey Ditch, from the confluence with Knoblick Creek and upstream approximately 0.93 mile. The mitigation site is located 0.4 mile upstream of this confluence. A base flood elevation of +387 was set for this location. Approximately 67% of the mitigation site lies at or below the 387 elevation.

VII. JUSTIFICATION FOR PROPOSED MITIGATION

The proposed mitigation area will be restored to a palustrine-forested wetland. The restoration to a forested landscape will work toward offsetting the upland forested impacts that will result from project construction. In addition, the 0.194 acre of impacted wetland will be replaced. However, streams that will be impacted will be compensated with an out-of-kind resource, and thus mostly out-of-kind functions. Improvements to 425' of the riparian zone of Bailey Ditch will result and promote improvement of those riparian related functions. The resulting forested wetlands will provide the functions related to water storage to reduce flooding risks and to decrease severity of downstream flooding. Since the mitigation area is within an actively producing agricultural area, additional water quality benefits will result from filtering of nutrients and decreasing sediment runoff. Historically, this floodplain and low lying areas would have been occupied by high quality, bottomland hardwoods, punctuated by emergent wetlands.

The provision of forested wetlands to compensate for the loss of a wetland and associated streams will not completely replace lost functions since the two aquatic forms are different. But restoration of PFO

[20] Starling, Edmund L. 1864. History of Henderson County, Kentucky. Publisher not cited.
[21] Federal Register, Volume 77, Number 237, pp 73398-73400. December 10, 2012. Proposed Flood Elevation Determinations.

wetlands can work to replace many of the functions that have been lost on a regional scale. The proposed restoration approach assures that the best possible scenario is provided for replacement of aquatic functions. This plan will institute a holistic approach for mitigation based on the following premises:

- Mitigation will be conducted off-site, but in an area where the historic conversion of PFO wetlands to agricultural land occurred on a large scale.
- Stream and wetland functions are considered together. To consider the two aquatic forms in tandem is essential in assuring that the area will receive complete ecological replacement.
- Since a significant amount of the Lower Green River 8-digit HUC watershed area has been converted to agricultural usage, PFO wetland restoration is crucial to offsetting the historic losses of wetlands within this region.

Following is a discussion of some particular motivations to accept out-of-kind mitigation for the streams that will be impacted by the proposed project.

1. ***8-Digit HUC Service Area*** **-** The Green River watershed contains 5.9 million acres, comprised of six 8-digit HUC areas including the Barren River, Pond River, Rough River, and the Upper, Middle, and Lower Green River. The impacts and the proposed mitigation area are located within the Lower Green River 8-digit HUC watershed area (05110005). The Lower and Middle Green River, and the Pond and Barren Rivers have a significant presence of agriculture as a land use. *The mitigation will improve the same 8-digit HUC drainage area that is to be impacted.*

2. ***12-Digit HUC Service Area*** – The impacts will be realized in two 12-digit HUC drainages including Lower East Fork Deer Creek-Deer Creek (051100050105) and Steamport Landing-Green River Watershed (051100050402). The proposed mitigation site is located in the Knoblick Creek 12-digit HUC drainage area (0511000050104). Based on a comparison of these three watersheds, Knoblick Creek has the highest percentage of agricultural land use, and the lowest percentage of wetlands. *The mitigation will improve a 12-digit HUC drainage that has had more agricultural impacts and fewer wetlands than the 12-digit HUC drainages that are to be impacted.*

3. ***Reversion of agricultural land to wetlands*** – The Lower Green River drainage has experienced significant losses in wetland area. Currently, the drainage contains only 1.8% of its total area in wetlands. Historically, the drainage contained 46.3% of its total area in wetlands. That percent difference constitutes a loss of 96.1% in wetland area within the Lower Green River drainage. *The*

mitigation will work toward offsetting the extraordinary wetland losses experienced in the 8-digit HUC drainage area.

4. ***Modifying the land use to improve water quality*** - Currently, the proposed mitigation site is farmed using conventional tillage practices. Although this site contains hydric soils and is adjacent to a large stream (Bailey Ditch) conventional tillage is implemented once or twice a year. Corn stalk and cob residue are expelled upon harvest, leaving a loose, undecayed layer of organic matter. The first overland flooding event will remove much of this residue and deposit it downstream. Even if no-till practices were put in place, the only water quality improvement that would result is reduced erosion from soil loss after conventional tillage. *Thus, modifying the land use to one that will naturally reduce erosion and even provide a system for capturing sediments will only improve water quality.*

5. ***Removing the need for soil amendments*** – Traditional farming practices used in raising row crops (corn or soybeans) require application of nitrogen and phosphorus in varying forms. Depending upon weather conditions, land slope, and tillage practice, an undetermined percentage of these amendments will leave the field before soil integration can occur. Both liquid and solid forms of amendments can be applied. Each form will have a different rate of runoff into the adjacent waterways. In a given season, 30-50% of the applied nitrogen is not used by the planted crop. The unused balance can leave the field through leaching or runoff. In poorly drained soils, this loss can be even greater. *Thus, removing the mitigation site from agricultural production will also remove a constant source of applied nitrogen and phosphorus to the adjacent streams.*

6. ***Water storage capacity*** – Any wetland provides water retention and release to the watershed that contributes to its hydrologic balance. Water from precipitation and surface water sources are stored and slowly released into the surrounding streams, ground water, and atmosphere. Factors that contribute to the amount of storage provided relates to landscape position, soil saturation, fiber content/degree of decomposition of the organic soils, vegetation density and type of vegetation. The proposed mitigation site abuts Bailey Ditch, a deeply incised stream that serves as a drainage ditch for surrounding and upstream farm fields. This ditch eventually drains into Knoblick Creek, which is a tributary to Deer Creek. The impact site is located on an unnamed tributary that drains directly into Deer Creek. Forested wetlands will be restored to offset both the wetland and stream impacts. *Restoration of the mitigation site with a high quality forested wetland will increase the water storage capacity of the Deer Creek watershed.*

7. ***Nutrient sink*** – Any wetland serves as a sink for nutrients, organic compounds, metals and organics. In addition, filtering of sediments and organic matter also take place. Storage of these compounds can be temporary or permanent. This biogeochemical cycling and storage can include nitrogen, phosphorus, carbon, sulfur, suspended solids, and some metals. Also, sediment transported due to upstream erosion can be stored in the wetland. *Thus, this and any wetland can provide an essential component in the biogeochemical cycle.*

8. ***Biological Productivity*** – Wetlands provide breeding and nursery sites, resting areas, and refuge for migratory and year-round species. Depending upon water depths, invertebrates and fish thrive in a wetland in support of the surrounding aquatic systems. *Thus, the restored wetland will provide alternate aquatic functions determined by an alternate habitat as compared to stream habitat.*

9. ***Wildlife Usage*** – Wetlands provide specialized habitat for those organisms requiring inundated or saturated conditions. In addition, migratory bird species use wetlands as resting and feeding areas when traveling along their migratory routes. The proposed mitigation site lies within the travel route of the Atlantic and Mississippi waterfowl flyways. As previously mentioned, the Mississippi flyway alone lost 11 M acres of wetlands from the 1950's to the 1970's. With the historic, significant loss of wetlands within these flyways, any restoration of wetlands within those flyways will only benefit migratory waterfowl. *Thus, the restoration of the mitigation site will have a direct impact on species that utilize the established flyways. Also, the loss of forested land at the impact site will be offset with the restoration of forest at the mitigation site.*

VIII. WATERSHED APPROACH

The 2008 mitigation rule[22] made definitive statements concerning the use of out-of-kind mitigation. On page *19632* of the rule, the following statement was made related to the justification of out-of-kind mitigation when a watershed approach is used:

> "Although out-of-kind mitigation may not offset all aquatic resource functions and services provided by the aquatic resource being affected by the permitted activity, out-of-kind mitigation may be important for restoring or improving watersheds, especially in cases where certain aquatic resource types have been disproportionately lost from a watershed (see the 2001 NRC

[22] Code of Federal Regulations. 33 CFR, Parts 325 BS 332 and 40 CFR Part 230. Compensatory Mitigation for Losses of Aquatic Resources; Final Rule. April 10, 2008.

> Report). It is not necessary to develop watershed plans to allow out-of-kind mitigation, but watershed factors need to be considered. Section 32.3(e)(2)[§ 230.93(e)(2)] requires district engineers to document the basis for requiring out-of-kind mitigation in the administrative record for the permit action."

The mitigation rule also lists certain factors of analysis regarding the watershed approach as stated on page 19674, item (c)(3)(i):

> "In the absence of a watershed plan determined by the district engineer under paragraph (c)(1) of this section to be appropriate for use in the watershed approach, the district engineer will use a watershed approach based on analysis of information regarding watershed conditions and needs, including potential sites for aquatic resource restoration activities and priorities for aquatic resource restoration and preservation. Such information includes: current trends in habitat loss or conversion; cumulative impacts of past development activities, current development trends, the presence and needs of sensitive species; site conditions that favor or hinder the success of compensatory mitigation projects; and chronic environmental problems such as flooding or poor water quality."

In 2011, the Army Corps of Engineers issued their Initial Green River Watershed Assessment.[23] This assessment preceded the final watershed assessment, which will not be released until later in 2014. In the initial assessment, interviews were conducted with interested persons/agencies/committees regarding their concerns for the Green River watershed. From this interview, 11 problems were summarized and ranked by frequency of response, which have the most impact on the Green River watershed. The first three responses, which follow, were agriculturally related.

- Riparian zone conservation/streambank erosion
- Sedimentation associated with current land use and agricultural practices
- Agricultural inputs from concentrated animal feeding operations (CAFO)

With the exception of the CAFO inputs, generally every agricultural operation has a direct impact on the riparian zone and sedimentation from field and/or streambank erosion.

Since the final Green River basin watershed plan has not been released, the mitigation site can only be assessed based upon what known functions can be provided to the watershed. However, these functions can also be inferred for those streams within the smaller Lower Green River 8-digit HUC drainage area. The watershed scale chosen to assess these functions is the Knoblick Creek 12-digit HUC drainage area,

[23] U.S. Army Corps of Engineers. 2011. Green River Watershed Section 719 Initial Watershed Assessment.

which contains the proposed mitigation site. The site is located along Bailey Ditch, a direct tributary to Knoblick Creek. Bailey Ditch enters Knoblick Creek approximately 1.45 miles upstream of the confluence with Deer Creek. The following items address the factors of analysis to be included in a watershed approach.

A. TRENDS IN HABITAT LOSS

As previously stated, the Knoblick Creek 12-digit HUC drainage area is comprised of 50.6% cultivated cropland. The other land uses such as grassland/herbaceous, open water, and pasture/hayland, which could be considered agricultural land uses, total another 8.5%. As such, 59.1% of the watershed is agriculturally controlled and managed. Additionally, 36.1% of the watershed remains forested. Of the total area, only 1.8% is mapped as wetlands.

Probably, land use changes have relatively stabilized in the Knoblick Creek drainage area. Due to regulatory restrictions related to wetland and stream activities, further conversion of these resources is unlikely without appropriate compensatory mitigation. However, with only 1.8% of the area mapped as wetlands, the majority of the wetland resources have already been converted to alternate land uses. No historic land use information is available that can project the types of wetland habitat lost, but undoubtedly, the majority of the wetland conversion was forested habitat. In addition, much of the hill-slope terrain was most likely inhabited by woody species.

The proposed mitigation will convert a cropped field to a forested, wetland habitat. The amount of area required for compensatory mitigation has not yet been determined. *However, any amount of restored area will increase the existing percentage of forested wetland within the Knoblick Creek drainage. In addition, reforestation of the Bailey Ditch riparian zone will also directly one of the three top ranked problems listed for the Green River Basin watershed.*

B. PRESENCE AND NEEDS OF SENSITIVE SPECIES

The Kentucky Division of Mine Permits was contacted by the applicant to determine if any known threatened or endangered species occurred within the vicinity of the project area. The KDMP's response

in a letter dated October 21, 2013 stated that no T/E species were identified.[24] The following language was excerpted from the letter of response:

> "The Division's review of the Kentucky State Nature Preserves Commission's Natural Heritage Database and information provided by the US Fish and Wildlife Service both indicate that occurrences of state/federal designated threatened or endangered species have NOT been recorded within or adjacent to the proposed permit area. Also, our review has determined that no potential habitat suitable for a federally listed species is located within the proposed permit area, due to previous impacts from mining, logging, or other activities. "

No site specific surveys were performed of the proposed project area or the proposed mitigation area. However, the Green River basin was incorporated into a study of the Hoosier-Shawnee Ecological Assessment (HSEA)[25]. This assessment included an analysis of the lower reaches of large tributaries of the Mississippi alluvial basin and all or significant portions of major drainages of the lower Ohio River basin, which includes the Green River. Their studies included fish, mussel, and crayfish species which are summarized as follows:

- **Fish Species -** This study documented 83 native fish species in the Lower Green, 101 species in the Middle Green, and 87 species in the Upper Green. The lower species richness number in the Lower Green is attributed in the study to extensive surface mining, stream channelization, and outdated land use practices. These factors lead to a more depauperate fish fauna than the surrounding drainages. No endemic species were found in the Lower Green River drainage.
- **Mussel Species** – This study documented 25 native mussel species in the Lower Green, 37 species in the Middle Green, and 58 species in the Upper Green. The Green River basin contains what is considered to be primary levels of species richness (31-58) in the Middle and Upper Green drainages, and secondary levels of species richness (21-30) in the Lower Green and Rough drainages. Overall, the Green River basin ranked highest in the study area for species richness (58 species).
- **Crayfish Species** – This study documented 6 native crayfish species in the Lower and Middle Green, and 8 species in the Upper Green. One endemic species, *Orconectes Rafinesquei* (Rough

[24] Kentucky Department for Natural Resources, Division of Mine Permits. October 21, 2013. Correspondence to Todd Beavan, ERMC in reference to Sebree Mining LLC Application #917-9007Am 2.
[25] USDA, Forest Service. 2004. The Hoosier-Shawnee Ecological Assessment. General Technical Report NC-244, Frank R. Thompason III, ed. "Fishes, Mussels, Crayfishes, and Aquatic Habitats of the Hoosier-Shawnee Ecological Assessment Area." By Brooks M. Burr, Justin T. Sipiorski, Matthew R. Thomas, Kevin S. Cummings, and Christopher A. Taylor.

River crayfish), is found throughout the Rough River drainage, and Deer Creek (Lower Green) in Webster County. This species is considered to be stable in these ranges.

In summary, fish species diversity is low, mussel species might be present where habitat allows, and potentially an endemic crayfish species could be found within or in the receiving streams to Bailey Ditch.

Another species of some concern within the general locale of the proposed impacts and the mitigation, is the copperbelly water snake (*Nerodia erythrogaster neglecta*). This species is the subject of the "Copperbelly Water Snake Conservation Agreement."[26] Within Kentucky, 14 counties are listed within the agreement area, including Webster County. The snake's habitat of mainly bottomland forests and shrub swamps have been greatly disrupted by past land use practices. Restoration within the conservation agreement area will only benefit the copperbelly water snake by replacing its required habitat.

Any restoration of an essential habitat or the improvement of the habitat conditions affecting any of these previously discussed aquatic species or wetland dependent species, would be beneficial to the watershed. The channelization of streams, removal of riparian zones, and diminution of water quality can be moderated by each small restoration that occurs within the watershed.

C. PROJECT SUCCESS

The proposed mitigation site is located within a watershed that has been drastically altered by past land use practices. Given that 50.6% of the Knoblick Creek drainage area is currently used for cultivating crops, any negative impacts to the aquatic resources directly attributable to this land use will continue.

The selected mitigation site is a cropped field that will be restored to forest. Based upon the site reconnaissance, hydric soils are present, along with the supporting hydrology suitable for wetland habitat. The abutting land uses are cultivated crops along the north, east and west sides. Kentucky state route 494 forms the southern boundary. Although, the abutting land uses are cultivated crops, the mitigation site should be able to achieve success regardless of these adjacent land practices.

Although the proposed mitigation site will be a small, albeit isolated patch of wetlands at this time, the applicant plans to incorporate this mitigation site into a larger, wetland complex. This complex will begin

[26] http://www.fws.gov/midwest/endangered/reptiles/cws/copprCAfcts.html#ag

at the crossing of the KY state route 494 bridge over Bailey Ditch and will incorporate bottomlands to the south along Bailey Ditch and Knoblick Creek. This proposed complex will be used for aquatic resource impacts that will be permitted in the future. *The proposed mitigation site, along with the proposed larger complex, will help to restore essential habitat to the Knoblick Creek drainage and thus directly impact beneficial functions to the downstream reaches.*

D. *CHRONIC ENVIRONMENTAL PROBLEMS*

1. Water Quality

The Kentucky Division of Water performs scheduled monitoring and analysis of the water quality throughout the state. Knoblick Creek has been monitored since 2002 for the purpose of determining impairments and sources of impairments.[27] Table 6 summarizes the KDOW sampling history of Knoblick Creek.

Table 6. Water Quality Impairments to Knoblick Creek (KY495850 00) mile 0.0-9.1 (mouth to headwaters)

Sampling Year	Cause of Impairment	Cause of Impairment Group	Sources of Impairment
2002	• Habitat Alterations • Siltation • Organic Enrichment/Low Dissolved Oxygen	• Habitat Alterations • Organic Enrichment/ Oxygen Depletion • Sediment	Not provided
2004	• Habitat Alterations • Total Dissolved Solids (TDS) • Siltation • Organic Enrichment/Low Dissolved Oxygen	• Habitat Alterations • Organic Enrichment/ Oxygen Depletion • Sediment • Salinity/Total Diss. Solids/Chlorides/ Sulfates	Not provided
2006	• Nutrient/Eutrophication Biological Indicators • Total Dissolved Solids (TDS) • Sedimentation/Siltation	• Nutrients • Sediment • Salinity/Total Diss. Solids/Chlorides/ Sulfates	• Loss Of Riparian Habitat • Managed Pasture Grazing • Non-Irrigated Crop Production • Rangeland Grazing
08	• Nutrient/Eutrophication Biological Indicators • Total Dissolved Solids (TDS) • Sedimentation/Siltation	• Nutrients • Sediment • Salinity/Total Diss. Solids/Chlorides/ Sulfates	• Loss Of Riparian Habitat • Managed Pasture Grazing • Non-Irrigated Crop Production • Rangeland Grazing
2010	• Nutrient/Eutrophication Biological Indicators • Total Dissolved Solids (TDS) • Sedimentation/Siltation	• Nutrients • Sediment • Salinity/Total Diss. Solids/Chlorides/ Sulfates	• Loss Of Riparian Habitat • Managed Pasture Grazing • Non-Irrigated Crop Production • Rangeland Grazing

[27] http://ofmpub.epa.gov/tmdl/attains_waterbody.control?p_list_id=KY495850_00&p_cycle=2002

From 2002 to 2010, the impairments listed related to agricultural land uses. In this watershed, most of the receiving streams for the cropped fields can be characterized as having no riparian zone, direct recipients of nitrogen laden surface and subsurface discharges, and having been historically, physically modified (channelized). In addition, several CAFO poultry operations exist within the Knoblick Creek watershed. To reiterate, these problems within the Knoblick Creek watershed, correlate with the top three ranked problems within the Initial Green River Assessment.

The Kentucky Division of Water presented their draft report to Congress concerning the 2012 list of the state's impaired waters[28]. The Green River basin's total waters not meeting their usages included 1,061.6 miles of streams/rivers, 5 miles of springs, and 14,569 acres of reservoirs. The Lower Green River includes 177.7 miles of streams that do not meet their designated usages, which comprise 16.7% of the total length of impaired streams in the entire Green River basin. Knoblick Creek and its receiving stream, Deer Creek, were listed as not meeting their designated usages. Based on Knoblick Creek's length of 9.1 miles, this creek comprises 5.1% of the streams/rivers not meeting their designated uses in the entire Lower Green River 8-digit HUC drainage area.

The Mississippi River Basin Healthy Watersheds Initiative[29] is a 12-state effort funded by the USDA to address nutrient loading in the Mississippi River Basin from its source in Minnesota to its mouth in the Gulf of Mexico. Hypoxia in the Gulf of Mexico has created the second-largest dead zone in the world. To combat the nutrient loading within the Mississippi basin, forty-one watersheds (3 per each of the 12 states) were selected by the NRCS based on potential for avoiding, controlling, and trapping nutrients and improving water quality. In Kentucky, the Lower Green River was one of the three 8-digit HUC watersheds chosen. Within each of these three watersheds, 12-digit HUC's were chosen as target areas. Steamport Landing-Green River (051100050402) (which contains the proposed project area) and Lower East Fork Deer Creek-Deer Creek (051100050105) (where Knoblick Creek discharges) 12-digit HUC areas were chosen as target drainages.[30] Any improvement projects in these drainages will be based on a three pronged premise of conservation practices focusing on avoiding, controlling, and trapping nutrients.

[28] Kentucky Division of Water. 2012. Draft Integrated Report to Congress on the Condition of Water Resources in Kentucky, Volume II 303(d) List of Surface Waters.
[29] Excerpted from website http://www.dnr.mo.gov/mrbi/
[30] Excerpted from website http://www.nrcs.usda.gov/Internet/FSE_DOCUMENTS/stelprdb1045823.pdf

Restoration at the mitigation site will work to alleviate field and streambank erosion, restore the lacking riparian zone, remove the site's contribution to nitrate runoff, and have an overall beneficial effect on water quality in the Knoblick Creek drainage.

2. Flooding

Previously, the 2012 Federal Register was cited in reference to the flooding issues related to Bailey Ditch. To reiterate, recurrent flooding was noted due to backwater effects from the Green River. The specific problem area was mentioned as Bailey Ditch from the confluence with Knoblick Creek and upstream approximately 0.93 mile. The mitigation site is located 0.4 mile upstream of this confluence. Approximately 67% of the mitigation site lies at or below the referenced 387' base flood elevation.

One of the basic functions of wetlands is short and long term water storage. Removal of native woody vegetation, grading to promote crop production, tillage for conventional row crops, and "improved" surface and subsurface drainage networks all decrease the soil's moisture retention capacity. *Modifications to these drainage networks within and around the mitigation site will unquestionably improve moisture retention. In addition, mature, woody vegetation will increase roughness which will decrease stream velocities and stream power of the overland flow.*

IX. SUMMARY

The proposed mitigation site is located along Bailey Ditch within the Knoblick Creek 12-digit HUC drainage area. This watershed has experienced large scale agricultural land conversion, and has documented, land use-related water quality issues. Restoration within the Knoblick Creek drainage area will not only have a direct impact on the 12-digit HUC area, but will continue to have positive influences downstream. Knoblick Creek flows into Deer Creek, which also has well documented water quality issues. In summary, the proposed mitigation will have the following short term and long term, and localized and regionalized beneficial effects:

- Decreased nutrient loading from nitrate runoff
- Improved temperature regulation in Bailey Ditch
- Increased sediment storage within the restored wetland

- Decreased sediment load to Bailey Ditch from exposed soils
- Increased short term and long term water storage
- More natural base flow conditions in Bailey Ditch
- Improved habitat for critical species (terrestrial and aquatic)
- Increased biogeochemical activity
- Increased biological productivity (leaf litter, organic inputs, etc.)
- Restoration of a critical resource that has been historically depleted (wetlands to cropland)